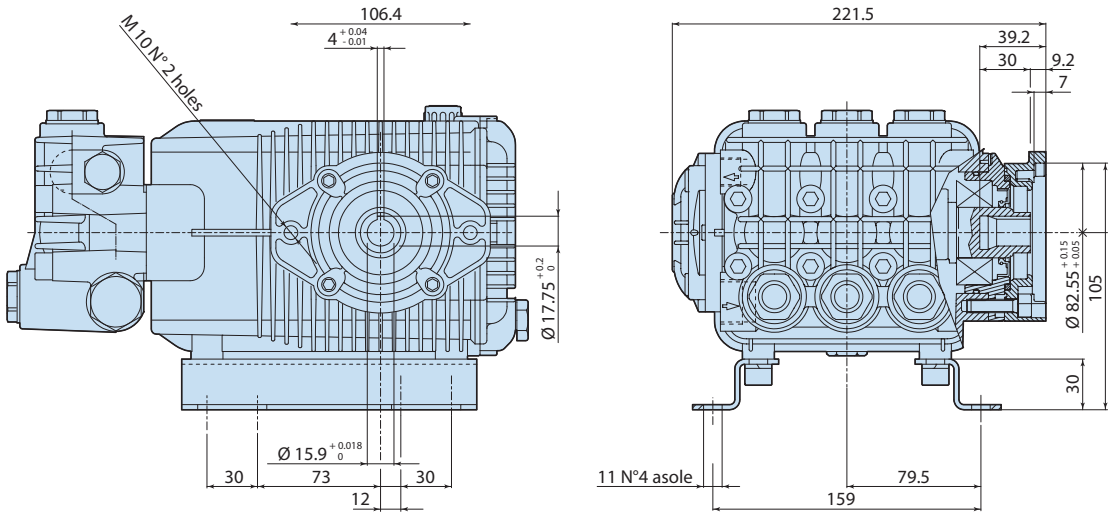
106.4
4 +0.04 -0.01
M.10 N°2 holes
Ø 17.75 +0.2 0
Ø 15.9 +0.018 0
30
73
30
12
221.5
39.2
30
9.2
7
Ø 82.55 +0.15 +0.05
105
30
11 N°4 asole
79.5
159

1948517