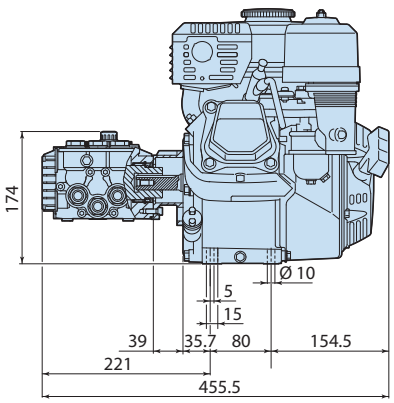
174
Ø 10
5
15
39
35.7
80
154.5
221
455.5

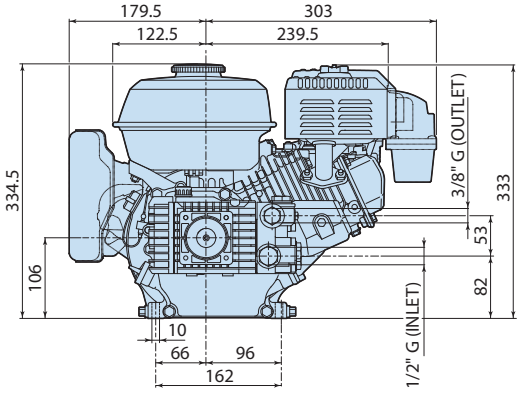
179.5
303
122.5
239.5
334.5
3/8" G (OUTLET)
333
53
106
82
10
66
96
162
1/2" G (INLET)

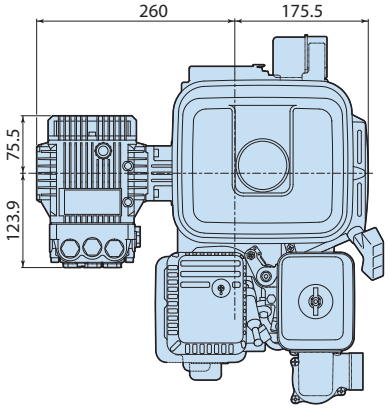
260
175.5
75.5
123.9

1328517