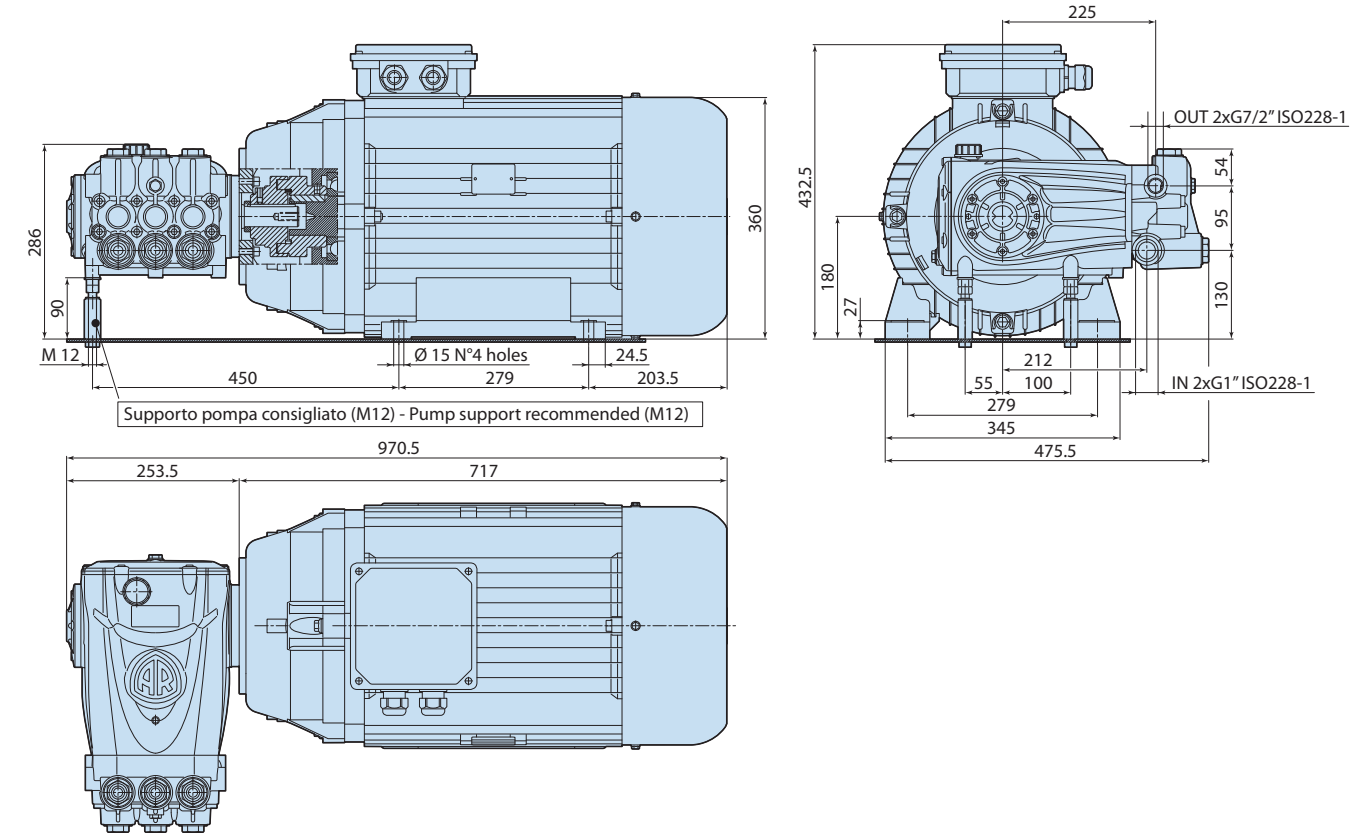
225
OUT 2xG7/2" ISO228-1
432.5
54
95
130
180
27
286
90
360
M 12
Ø 15 N°4 holes
24.5
450
279
203.5
212
55
100
IN 2xG1" ISO228-1
279
345
475.5
Supporto pompa consigliato (M12) - Pump support recommended (M12)
970.5
253.5
717

3668511