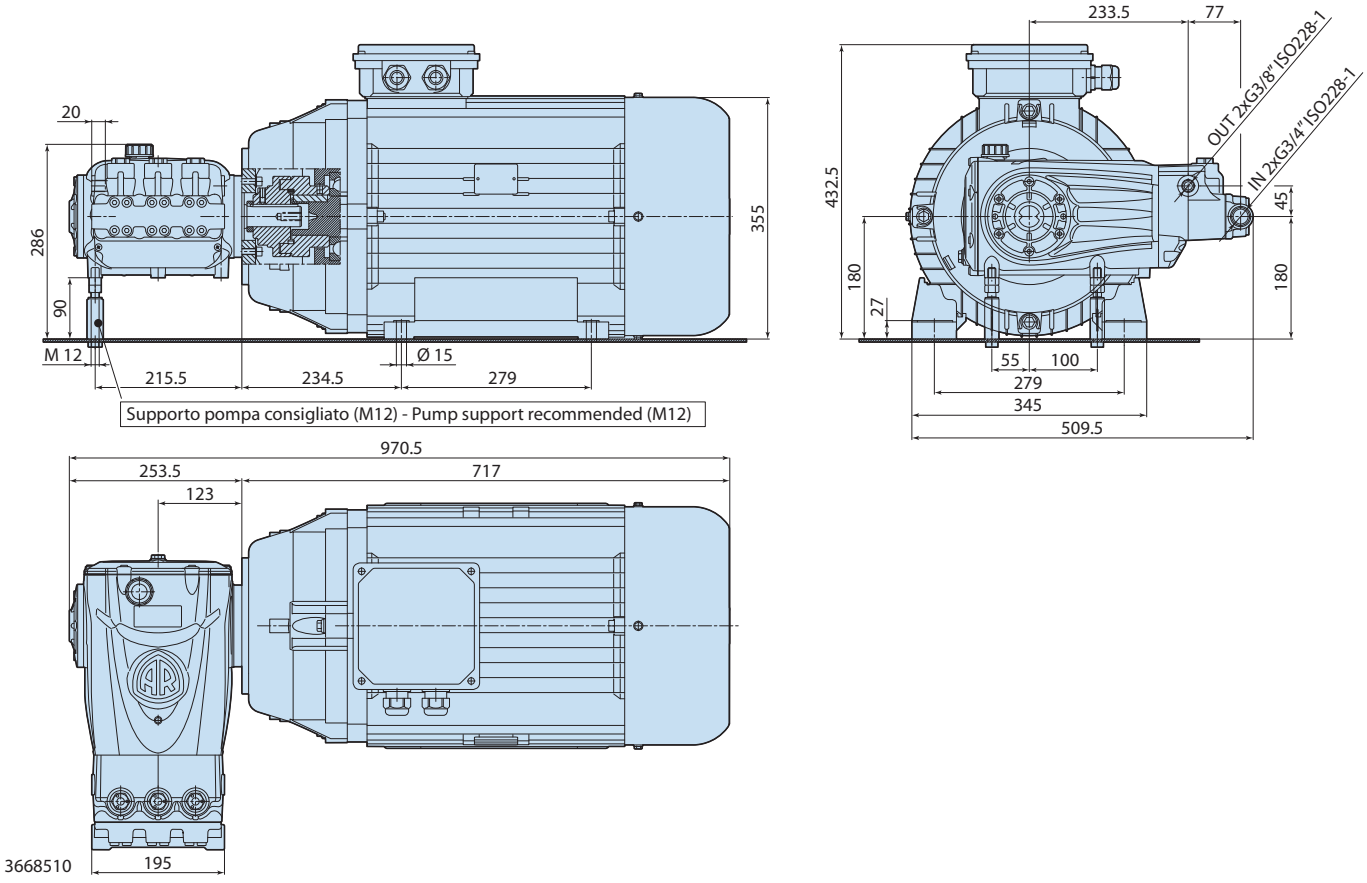
20
286
90
355
M 12
215.5
234.5
279
Ø 15
Supporto pompa consigliato (M12) - Pump support recommended (M12)
970.5
253.5
717
123
195
3668510
233.5
77
OUT 2xG3/8" ISO228-1
IN 2xG3/4" ISO228-1
432.5
180
27
45
180
55
100
279
345
509.5