GENERAL PUMP *A member of the Interpump Group*

DAC Series

Double impeller, cast iron centrifugal water pumps

FEATURES

- Heavy duty cast iron construction
- Balanced brass impeller and plastic diffuser
- Efficient graphite and ceramic mechanical seal
- Buna-N elastomers for exceptional compatibilty
- Large NPT-F ports
- Priming port

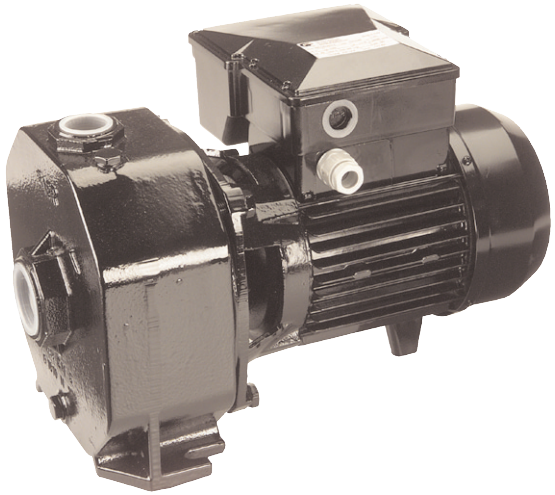

SPECIFICATIONS

Part Number	Inlet	Outlet	Impeller	Horse Power	RPM	Volts	Max psi	Max Temp °F(°C)	Mechanical Seal	Impeller Material	Body Material
DAC1201511	1"	1.5"	4 1/4"	1.5 HP	3450	110	145	158(70)	Graphite/Ceramic	Brass Impeller / Plastic Diffuser	Cast Iron
DAC1202031	1"	1.5"	4 1/4"	2.2 HP	3450	230	145	158(70)	Graphite/Ceramic	Brass Impeller / Plastic Diffuser	Cast Iron

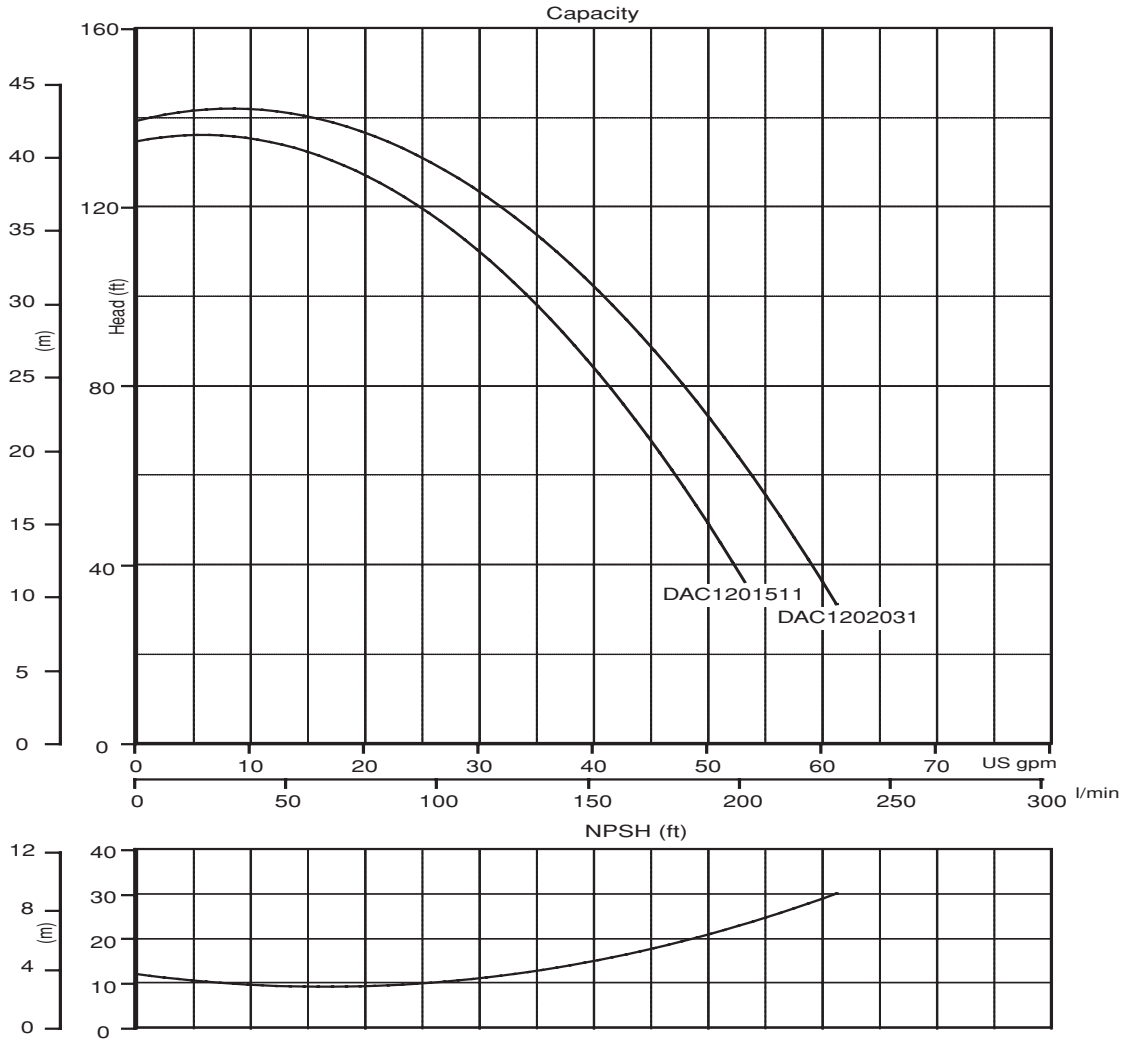

GP CENTRIFUGALS

GENERAL PUMP

DAC Series

GENERAL PUMP *A member of the Interpump Group*

Double impeller, cast iron centrifugal water pumps

PARTS LIST

Item	Part No.	Description	Qty
5.	W51010091	Pump Body, Cast Iron	1
8.	W81100090	Drain Plug, Brass	1
9.	W57540204	Drain Gasket, Aluminum	1
10.	W57410500	Impeller Nut, Brass	1
10a.	W57411005	Nut, Brass	1
12.	W51300103	Impeller, Brass, DAC1201511	1
	W51300122	Impeller, Brass, DAC1202031	
13.	W54250140	Rotating Mechanical Seal, Graphite	1
14.	W54730580	O-ring	1
14a.	W54730060	O-ring	1
15.	W54200120	Fixed Mechanical Seal, Ceramic	1
17.	W54300120	Deflector	1
18.	W53200080	Flange, Cast Iron	1
19.	W57065250	Screw	4
20.	W53400140	Bearing	2
21.	W57800401	Key, 304 SS	1
22.	W50101100	Pump & Motor Shaft, DAC1201511	1
	W50101200	Pump & Motor Shaft, DAC1202031	
24.	W56800080	Circlip	1
25.	W50001141	Motor Casing w/ Stator, DAC1201511	1
	W50001528	Motor Casing w/ Stator, DAC1202031	
26.	W55300600	Foot, Plastic	1
27.	W57002520	Tie-Rod	4
29.	W55130030	Terminal Board Cover	1
30.	W55100305	Terminal Board	1
31.	W55170202	Strain Relief	1
32.	W53220061	Rear Motor Cover	
33.	W55000080	Motor Fan, Plastic	1
35.	W55050080	Fan Cover	1
36.	W54150020	Impeller Cover	1
40.	W56900020	Impeller Spacer, Brass	1
41.	W57300502	Stud screw	1
50.	W54100040	Diffuser, Plastic	1
52.	W55500440	Capacitor, DAC1201511	1
	W55500343	Capacitor, DAC1202031	

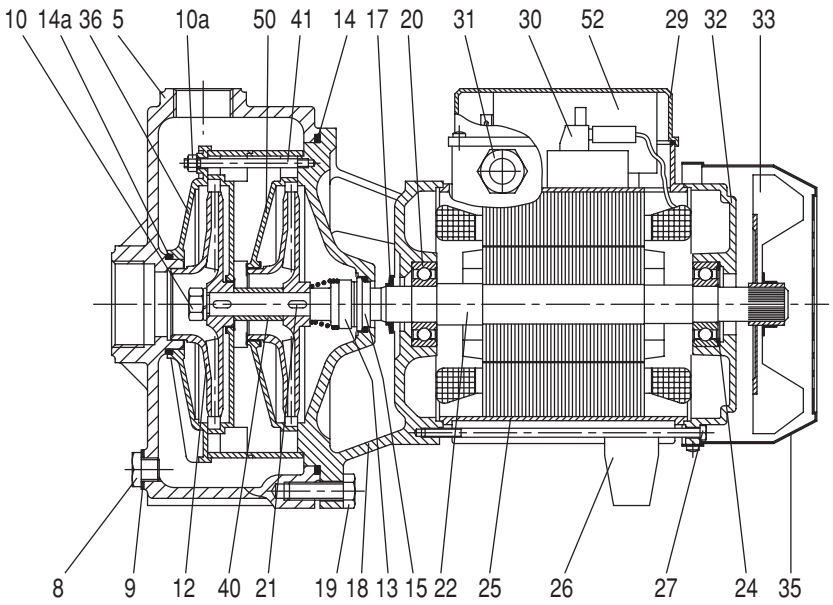

DIMENSIONS

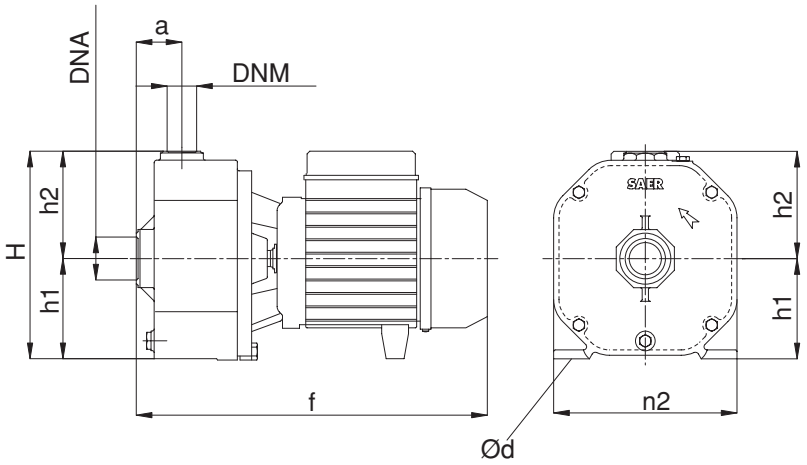

in (mm)	DNA	DNM	f	a	n2	H	h1	h2	lb(kg)
DAC1201511	1.5	1	15.5 (393)	2.0 (51)	8.1 (205)	9.1 (232)	4.4 (112)	4.7 (120)	52.9 (24)
DAC1202031	1.5	1	15.5 (393)	2.0 (51)	8.1 (205)	9.1 (232)	4.4 (112)	4.7 (120)	57.3 (26)

GENERAL PUMP 1174 NORTHLAND DRIVE • MENDOTA HEIGHTS, MN 55120
PHONE: (651)454-6500 • FAX: (651)454-4524 • e-mail: sales@gpcompanies.com • www.generalpump.com

300359 Rev. B
7-02

GENERAL PUMP