GENERAL PUMP *A member of the Interpump Group*

Fixed Injector

Quick Connect - SS Plug

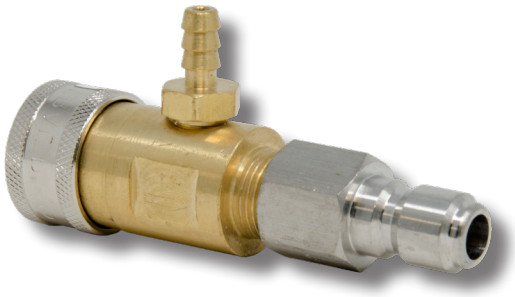

SPECIFICATIONS

Part Number	D10110	D10107	D10111	D10108	D10112	D10109
Orifice	1.8		2.1		2.3	
Maximum Volume	2 - 3 GPM		3 - 5 GPM		5 - 8 GPM	
Maximum Pressure	4500 PSI					
Flow Direction	F ➤M	M➤F	F➤M	M➤F	F➤M	M➤F
Maximum Temperature	190° F					
Inlet Port-3/8" QD	Coupler	Plug	Coupler	Plug	Coupler	Plug
Outlet Port-3/8" QD	Plug	Coupler	Plug	Coupler	Plug	Coupler
Hose Barb Size	1/4"					
Dimensions	3.875" L x 1.125" W x 2.0" H					
Weight	0.50 lb.					
Materials	Brass, Stainless Steel, Viton					

PARTS LIST

No.	Part No.	Description	QTY.
1*	2701020	O-Ring	1
2	2720011	Spring, Collar	1
3	2520058	Ball, Coupler	1
4	2202005	Snap Ring	1
5*	2720013	Spring	1
6*	2520064	Ball, Injector	1
7*	2701021	O-Ring	1
8	2510090	Collar	1
9	D10078	Plug (D10110, D10111, D10112)	1
	D10079	Plug (D10107, D10108, D10109)	1
10	2510084	Hose Barb	1
11	2510137	Housing, Injector, 3/8" QD, 3/8" NPT-F, MF Brass (D10107, D10111, D10112)	1
	2510143	Housing, Injector, 3/8" QD, 3/8" NPT-F, FM Brass (D10110, D10111, D10112)	1
12	2520079	Nozzle, Ø.070" (D10110, D10107)	1
	2520065	Nozzle, Ø .083" (D10111, D10108)	1
	2520073	Nozzle, Ø .091" (D10112, D10109)	1
*	2100239	Repair Kit	

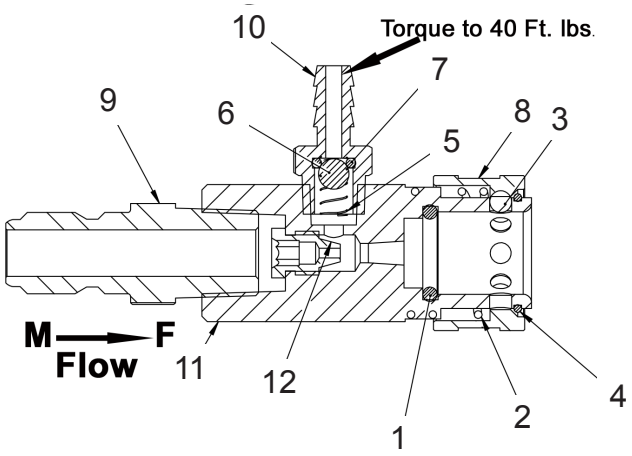

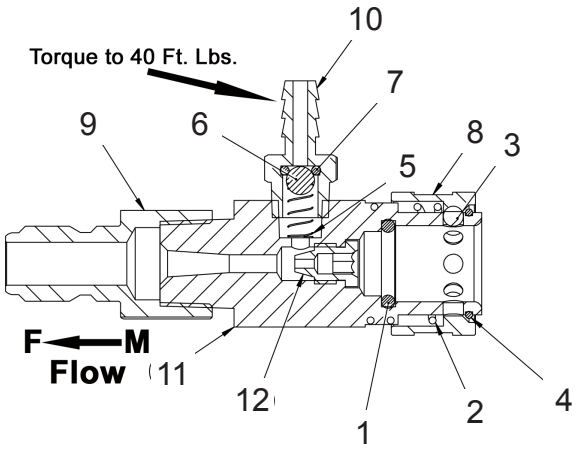

General Pump
is a member of
the Interpump Group

GENERAL PUMP 1174 Northland Drive • Mendota Heights, MN 55120
Phone: 651.686.2199 • Fax: 800.535-1745 • e-mail: sales@gpcompanies.com • www.generalpump.com

300637 Rev. D
09-20

GENERAL PUMP

ACCESSORIES