GENERAL PUMP *A member of the Interpump Group*

Adjustable Injector

Quick Connect - SS Plug

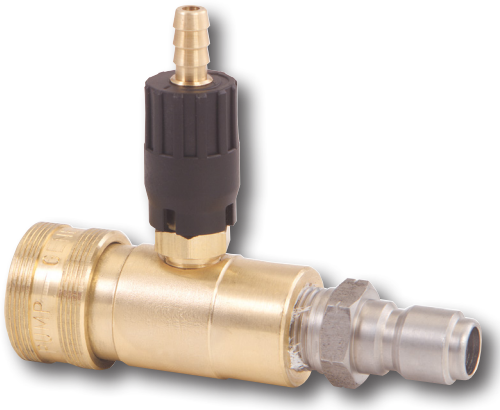

SPECIFICATIONS

Part Number	D10094	D10104	D10095	D10105	D10096	D10106
Orifice	1.8		2.1		2.3	
Maximum Volume	2 - 3 GPM		3 - 5 GPM		5 - 8 GPM	
Maximum Pressure	4000 PSI					
Flow Direction	F➔M	M➔F	F➔M	M➔F	F➔M	M➔F
Maximum Temperature	190° F					
Inlet Port-3/8" QD	Coupler	Plug	Coupler	Plug	Coupler	Plug
Outlet Port-3/8" QD	Plug	Coupler	Plug	Coupler	Plug	Coupler
Hose Barb Size	1/4"					
Dimensions	3.875" L x 1.125" W x 2.0" H					
Weight	0.50 lb.					
Materials	Brass, Stainless Steel, Viton					

PARTS LIST

Item	Part Number	Description	QTY.
1	2701020	O-ring	1
2	2720011	Spring, Collar	1
3	2520058	Ball, Coupler	1
4	2202005	Snap Ring	1
5	2720013	Spring	1
6	2520064	Ball, Injector	1
7	2701021	O-ring	1
8	2510090	Collar	1

Item	Part Number	Description	QTY.
9	D10078	Plug (D10094)	1
10	2510120	Housing, Injector (D10094)	1
11	2510121	Stem	1
12	2701032	O-ring	1
13	2660121	Knob	1
14	2510122	Hose Barb	1
15	2520079	Nozzle, Ø.070" (D10094)	1

D10094

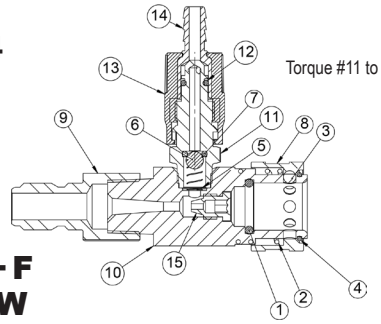

Item	Part Number	Description	QTY.
1	2701020	O-ring	1
2	2720011	Spring, Collar	1
3	2520058	Ball, Coupler	1
4	2202005	Snap Ring	1
5	2720013	Spring	1
6	2520064	Ball, Injector	1
7	2701021	O-ring	1
8	2510090	Collar	1

Item	Part Number	Description	QTY.
9	2510121	Stem	1
10	2701032	O-ring	1
11	2660121	Knob	1
12	2510122	Hose Barb	1
13	2520079	Nozzle (D10104)	
14	2510136	Housing, Injector (D10104)	1
15	D10079	Plug, 3/8x3/8-M	1

D10104

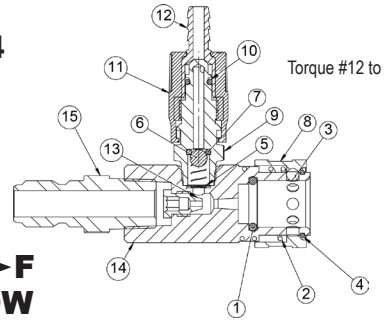

Item	Part Number	Description	QTY.
1	2701020	O-ring	1
2	2720011	Spring, Collar	1
3	2520058	Ball, Coupler	1
4	2202005	Snap Ring	1
5	2720013	Spring	1
6	2520064	Ball, Injector	1
7	2701021	O-ring	1
8	2510090	Collar	1

Item	Part Number	Description	QTY.
9	D10078	Plug (D10095)	1
10	2520065	Nozzle (D10095)	
11	2510120	Housing, Injector (D10095)	1
12	2510121	Stem	1
13	2701032	O-ring	1
14	2660121	Knob	1
15	2510122	Hose Barb	1

D10095

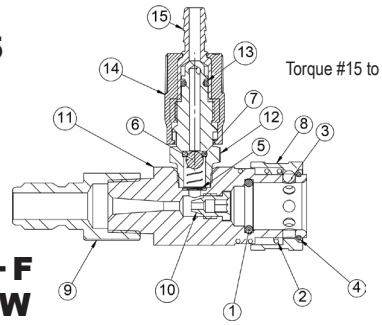

ACCESSORIES

GENERAL PUMP

GENERAL PUMP *A member of the Interpump Group*

Adjustable Injector

Quick Connect - SS Plug

PARTS LIST

Item	Part Number	Description	QTY.
1	2701020	O-ring	1
2	2720011	Spring, Collar	1
3	2520058	Ball, Coupler	1
4	2202005	Snap Ring	1
5	2720013	Spring	1
6	2520064	Ball, Injector	1
7	2701021	O-ring	1
8	2510090	Collar	1

Item	Part Number	Description	QTY.
9	2510121	Stem	1
10	2701032	O-ring	1
11	2660121	Knob	1
12	2510122	Hose Barb	1
13	2510136	Housing, Injector (D10105)	1
14	D10079	Plug, 3/8x3/8-M	1
15	2520065	Nozzle (D10105)	

D10105

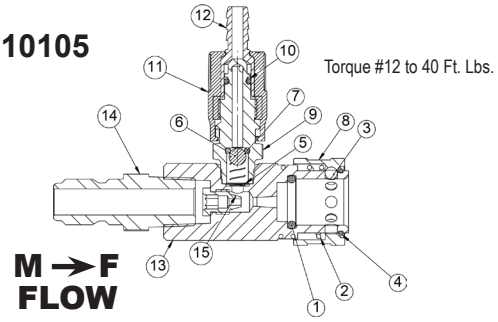

Item	Part Number	Description	QTY.
1	2701020	O-ring	1
2	2720011	Spring, Collar	1
3	2520058	Ball, Coupler	1
4	2202005	Snap Ring	1
5	2720013	Spring	1
6	2520064	Ball, Injector	1
7	2701021	O-ring	1

Item	Part Number	Description	QTY.
9	D10078	Plug (D10096)	1
10	2510120	Housing, Injector (D10096)	1
11	2510121	Stem	1
12	2520073	Nozzle (D10096)	
13	2701032	O-ring	1
14	2660121	Knob	1
15	2510122	Hose Barb	1

D10096

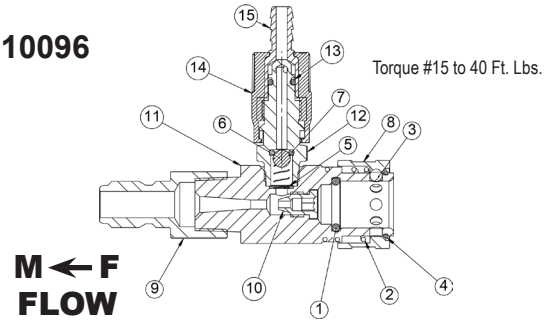

Item	Part Number	Description	QTY.
1	2701020	O-ring	1
2	2720011	Spring, Collar	1
3	2520058	Ball, Coupler	1
4	2202005	Snap Ring	1
5	2720013	Spring	1
6	2520064	Ball, Injector	1
7	2701021	O-ring	1
8	2510090	Collar	1

Item	Part Number	Description	QTY.
9	2510121	Stem	1
10	2701032	O-ring	1
11	2660121	Knob	1
12	2510122	Hose Barb	1
13	2510136	Housing, Injector (D10106)	1
14	D10079	Plug, 3/8x3/8-M	1
15	2520073	Nozzle (D10106)	

D10106

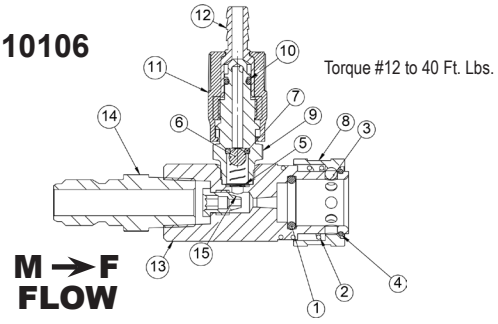

GENERAL PUMP 1174 Northland Drive • Mendota Heights, MN 55120
Phone: 651.686.2199 • Fax: 800.535-1745 • e-mail: sales@gpcompanies.com • www.generalpump.com

310222 Rev. A
03-21

GENERAL PUMP