28.3000.00 BTR 1750 ceiling boom,rot.,single
28.3020.00 BTR 2000 ceiling boom,rot.,single
28.3025.00 BTR 2500 ceiling boom,rot.,single
28.3030.00 BTR 1600 Ceiling boom,rot.,2 springs

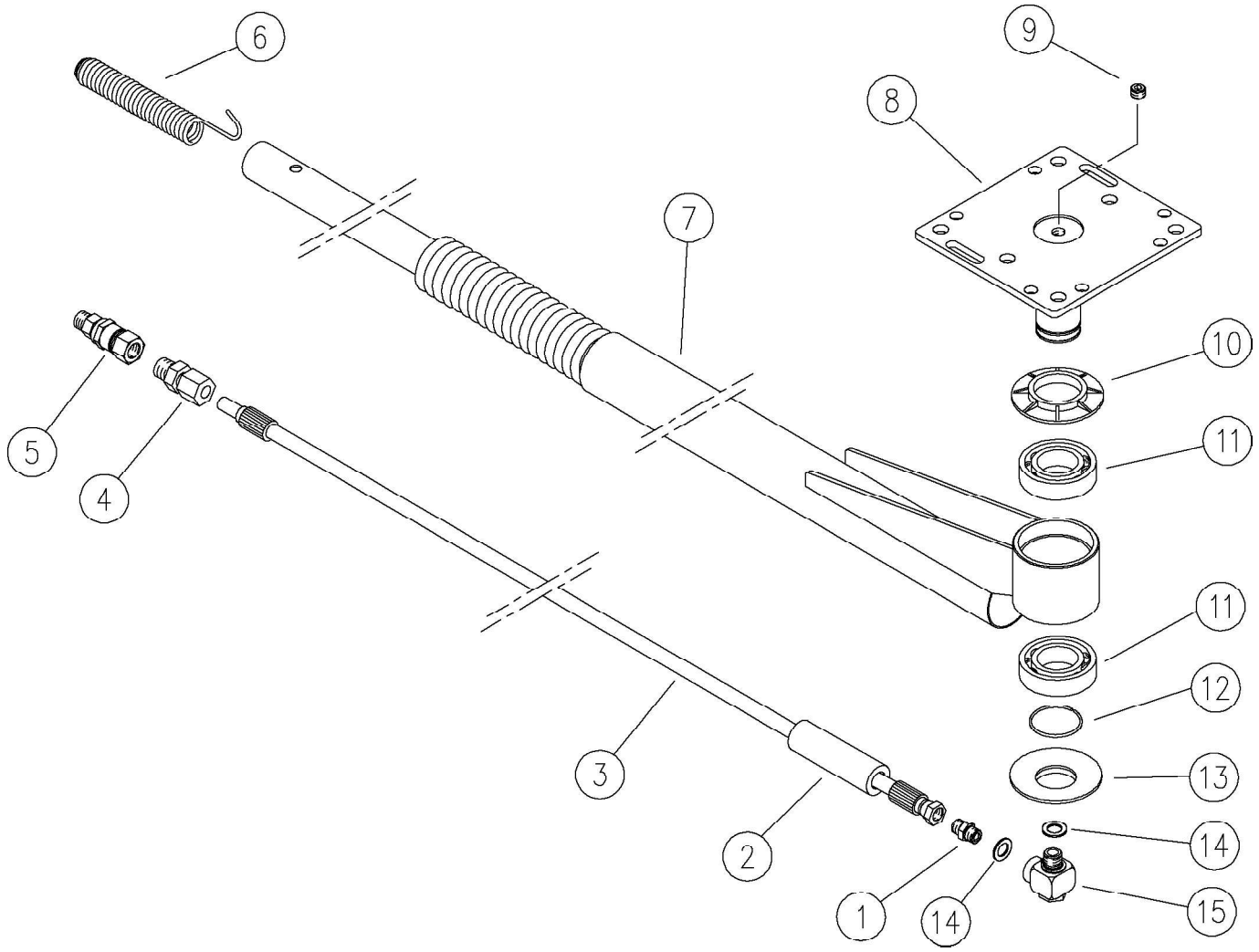

Pos.	P/N	Description	Q.ty	K1	K2	K3	K4	
1	13.5006.00R	Nipple,z.pl. 1/4MM Bsp	1					25
2	28.3064.85R	Hose protector 120 mm	1					10
3	16.0510.19R	Hose, 1/4F Bsp-12 1,9m (1)	1					1
3	16.0510.20R	Hose, 1/4F Bsp-12 2,15m (2)	1					1
3	16.0510.25R	Hose, 1/4F Bsp-12 2,65m (3)	1					1
3	16.0510.17R	Hose, 1/4F Bsp-12 1,75m (4)	1					1
4	13.5023.00R	Ring fitting, 3/8M Bspt-d.12F	1					5
5	26.1200.40	SW25 Swivel,ball-bear. 3/8 MF Bsp	1					5
6	28.3003.51R	Front spring, 150 mm Sst.	1					5
7	28.3012.21R	Welded boom, 1750 mm Sst. (1)	1					1
7	28.3022.21R	Welded boom, 2000 mm Sst. (2)	1					1

Pos.	P/N	Description	Q.ty	K1	K2	K3	K4	
7	28.3027.21R	Welded boom, 2500 mm Sst. (3)	1					1
7	28.3112.21R	Welded boom, 1600 mm Sst. (4)	1					1
8	28.3005.21R	Ceiling mount pin, Sst.	1					1
9	28.0364.31R	Plug, int.hex. 1/4 Bspt brass	1					10
10	28.3001.84R	Guard ring, Tpe black	1					10
11	11.4439.68R	Ball-bearing, 40x68x15 mm - 2RS1	2					2
12	28.3002.51R	Snap ring, 2,5x36,8 mm Sst.	1					10
13	28.3004.84R	Guard ring, Tpe black	1					10
14	14.3813.22R	Washer, 13,2x22x1,5 mm alu.	2					25
15	26.1300.20	SW90 Swivel 90°, sst, 1/4 MF Bsp	1					5

(1) 28.3000.00 (2) 28.3020.00 (3) 28.3025.00 (4) 28.3030.00