CXC-70/12-S

MAX FLOW	18.5 GPM / 70 L/MIN
MAX PRESSURE	1740 PSI / 120 BAR
RATED PUMP SPEED	1450 RPM
POWER REQUIREMENT	21.5 HP ELECTRIC
LUBRICATION	35 OZ UDOR LUBE

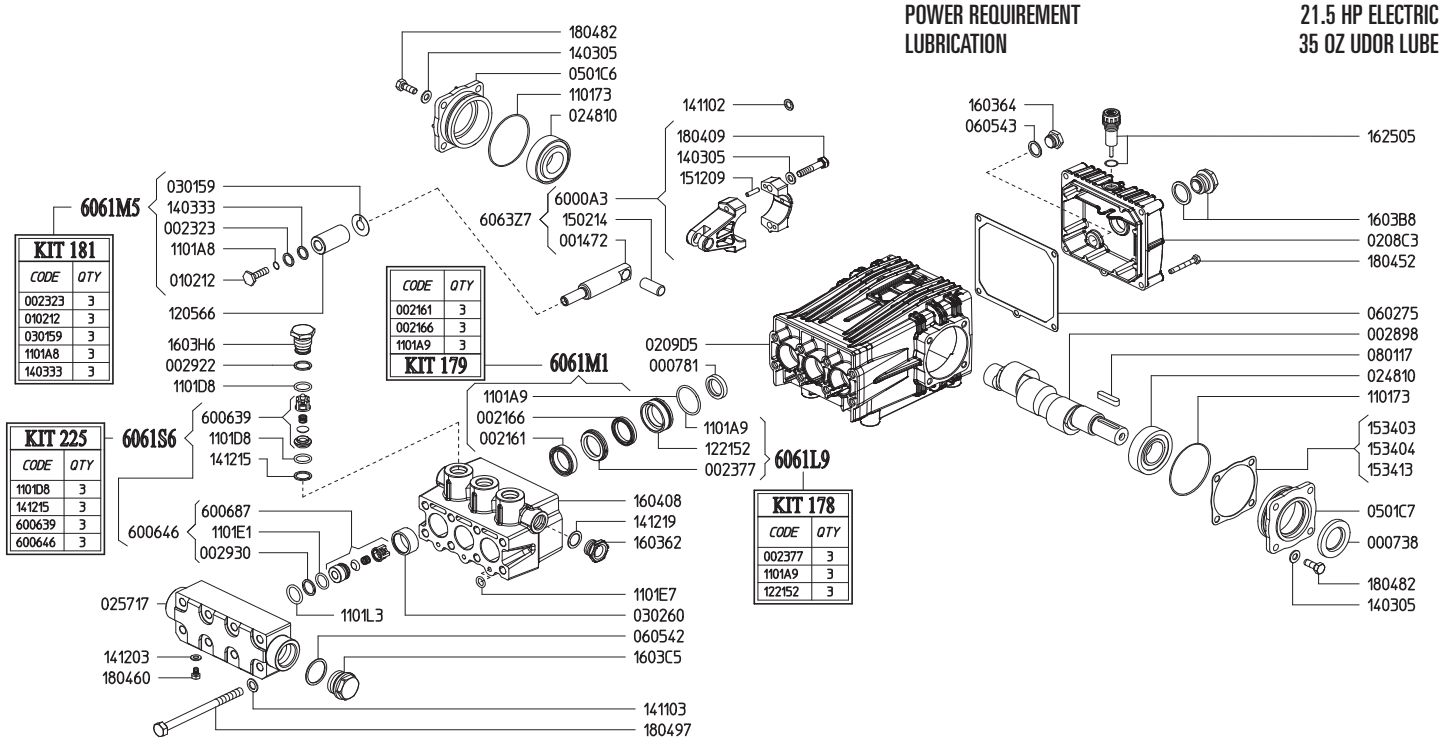

Part #	Description	Qty
0007.38	OIL SEAL D30	1
0007.81	OIL SEAL D20	3
0014.72	PLUNGER GUIDE D30 "CX"	3
0021.61	WATER SEAL H.P. D32 APE [C]	3
0021.66	WATER SEAL L.P. D30 BPC [C]	3
0023.23	RING D10.4 [B]	3
0023.77	UPPER RING D30 [D]	3
0028.98	MALE SHAFT D24	1
0029.22	RING "CK" D15.2	3
0029.30	RING "CX" D28.8 [A]	3
0102.12	PLUNGER BOLT [B]	3
0208.C3	BACK COVER "C/CK"	1
0209.D5	CRANKCASE "C/CK/CH"	1
0248.10	ROLLER BEARING D30	2
0257.17	SUCTION MANIFOLD "CX"	1
0301.59	DISC D22 [B]	3
0302.60	SPACER "CX"	3
0501.C6	BEARING CLOSED FLANGE	1
0501.C7	BEARNIG HOLLOW FLANGE	1
0602.75	BACK COVER GASKET	1
0605.42	GASKET D27	1
0605.43	GASKET D17	1
0801.17	KEY A8S7S35 UNI6604	1
1101.73	O-RING D67.95 (RIF.3268)	2
1101.A8	O-RING D9.25 (RIF.2037) [B]	3
1101.A9	O-RING D37.77 (RIF.3150) [C D]	3
1101.D8	O-RING D13.95 (RIF.3056) 90SHORE	3
1101.D8	O-RING D13.95 (RIF.3056) 90SHORE [A]	3
1101.E1	O-RING D26.65 (RIF.3106) 90SHORE [A]	3
1101.E7	O-RING D9.92 (RIF.112)	8
1101.L3	O-RING D33.00 (RIF.3131) 90SHORE	3
1205.66	CERAMIC PLUNGER D30	3
1221.52	PRESSURE RING D30 [D]	3
1403.05	WASHER D8.4	14
1403.33	WASHER D13.4 [B]	3

Part #	Description	Qty
1411.02	SCHNORR WASHER D8	6
1411.03	SCHNORR WASHER D10	8
1412.03	BONDED WASHER D6.7	1
1412.15	RING 400BAR [A]	3
1412.19	BONDED WASHER D21.5	1
1502.14	PIN D14X32	3
1512.09	PLUG D5X20 UNI1707	6
1534.03	SHIM 0.1 MM	1
1534.04	SHIM 0.2 MM	1
1534.13	SHIM 0.05 MM	1
1603.62	PLUG G1/2	1
1603.64	PLUG G3/8	1
1603.B8	OIL PLUG G3/4 + GASKET	1
1603.C5	PLUG G1"	1
1603.H6	VALVE PLUG PISTON D20	3
1604.08	HEAD "CX" PISTON D30	1
1625.06	OIL PLUG G1/2	1
1804.09	HEX SCREW M8X40 UNI5737	6
1804.52	HEX SCREW M6X45 UNI5737	5
1804.60	HEX SCREW M6X10 UNI5739	1
1804.82	HEX SCREW M8X22 UNI5739	8
1804.97	HEX SCREW M10X160	8
6000.A3	ROD ASSEMBLY	3
6006.39	VALVE ASSEMBLY 400BAR COMPLETE [A]	3
6006.46	SUCTION VALVE ASSEMBLY "CX" D30 [A]	3
6006.87	VALVE ASSEMBLY 400BAR W/O O-RING [A]	3
6061.L9	BRASS RING KIT D30 (KIT 178)	
6061.M1	WATER SEAL KIT D30 (KIT 179)	
6061.M5	PLUNGER KIT D30 (KIT 181)	
6061.S6	VALVE KIT D30 "CX" (KIT 225)	

[A] Parts in 6061.S6 (Kit 225).
[B] Parts in 6061.M5 (Kit 181).
[C] Parts in 6061.M1 (Kit 179).
[D] Parts in 6061.L9 (Kit 178).