Mi-T-M® CORPORATION

8650 Enterprise Drive, Peosta IA 52068
563-556-7484 / Fax 563-556-1235

PARTS LIST FOR

CW-5004-0ME3

(AFTER SERIAL #10005894)

Motor Horsepower:	**15 HP**
Pump Oil Grade:	**Mi-T-M Pump Oil #AW-4085-0016**
Pump Oil Capacity:	**40.6 oz.**
Nozzle Size:	**3.5**

©Copyright 2002, Mi-T-M Corporation®

This Parts Listing has been compiled for your benefit. You can be assured your Mi-T-M Cold Water Pressure Washer was constructed and designed with quality and performance in mind using over 25 years experience in the pressure washer business. Each component has been rigorously tested to insure the highest level of acceptance.

The contents of this Parts Listing are based on the latest product information available at the time of publication. Mi-T-M reserves the right to make changes in price, color, materials, equipment, specifications or models at any time without notice.

WARNING

THIS IS A PROFESSIONAL HIGH PRESSURE, COLD WATER PRESSURE WASHER. CAUTION SHOULD BE OBSERVED WHEN USING OR REPAIRING THIS UNIT! READ AND FOLLOW THE SAFETY WARNINGS LISTED BELOW BEFORE ATTEMPTING ANY REPAIRS ON THIS PRESSURE WASHER!

SAFETY WARNINGS

1. NEVER alter or modify the equipment. Be sure any accessory items and system components being used will withstand the pressure developed. Use only genuine Mi-T-M parts for repair of your pressure washer. Failure to do so can cause hazardous operating conditions and will VOID warranty.

2. NEVER make adjustments on machinery while the unit is connected to the power source. Turning over the machinery by hand during adjustment or cleaning might start the machinery, causing serious injury to the operator.

3. Know how to stop and bleed pressures quickly. Be thoroughly familiar with controls.

4. Before servicing the unit, turn unit off, relieve the water pressure and allow the unit to cool down. Do not make repairs while the unit is running. Service in a clean, dry, flat area.

5. After testing the machine, DO NOT leave the pressurized unit unattended. Shut off the unit and release trapped pressure before leaving.

Table of Contents

SPECIFICATIONS **3**
FRAME ASSEMBLY FOR CW-5004-0ME3 ..... **4**
PUMP ASSEMBLY (3-0169) **6**
UNLOADER ASSEMBLY (8-0522) **8**
GUN ASSEMBLY (16-0343) **10**
CONTROL BOX ASSEMBLY (230 VOLT) **12**
WIRING SCHEMATIC (230 VOLT) **14**
WIRING DIAGRAM (230 VOLT) **15**
CONTROL BOX ASSEMBLY (CX-0057 OPTION) (460 VOLT) **16**
WIRING SCHEMATIC (460 VOLT) **18**
WIRING DIAGRAM (460 VOLT) **19**

©Copyright 2002, Mi-T-M Corporation®

SPECIFICATIONS

CW-5004-0ME3

MODEL NUMBER	CW-5004-0ME3
Operating Pressure (PSI/Bar):	5000/344.7
High Pressure Nozzle:	3.5
Water Volume (GPM/lpm):	4.0/15.1
Motor:	Totally enclosed fan cooled, circuit breaker thermal overload protection, 35ft. power supply cord.
Horsepower	15.0
Voltage	230
Phase	Three
Amps	40
Pump:	Direct Driven, Oil Bath, Triplex Piston
Oil Type	Mi-T-M Pump Oil #AW-4085-0016
Oil Capacity (oz./liters)	40.6/1.2
Plungers	Ceramic
Manifold	Forged Brass
Valves	Stainless Steel
Unloader	Preset
Heat Dump Valve	Relieves heated water during unloader bypass stage
Unit Net Weight w/Marathon (lbs/Kg)	379/172
Unit Shipping Weight w/Marathon (lbs/Kg)	520/236
Unit Net Weight w/Baldor (lbs/Kg)	424/192
Unit Shipping Weight w/Baldor (lbs/Kg)	565/256
Unit Net Dimension (in/cm)	45.5Lx32.5Wx30H/ 115.5Lx82.5Wx76.5H
Unit Shipping Dimension (in/cm)	48.5Lx30.5Wx35.5H/ 123Lx77.5Wx90H

©Copyright 2002, Mi-T-M Corporation®

FRAME ASSEMBLY FOR CW-5004-0ME3

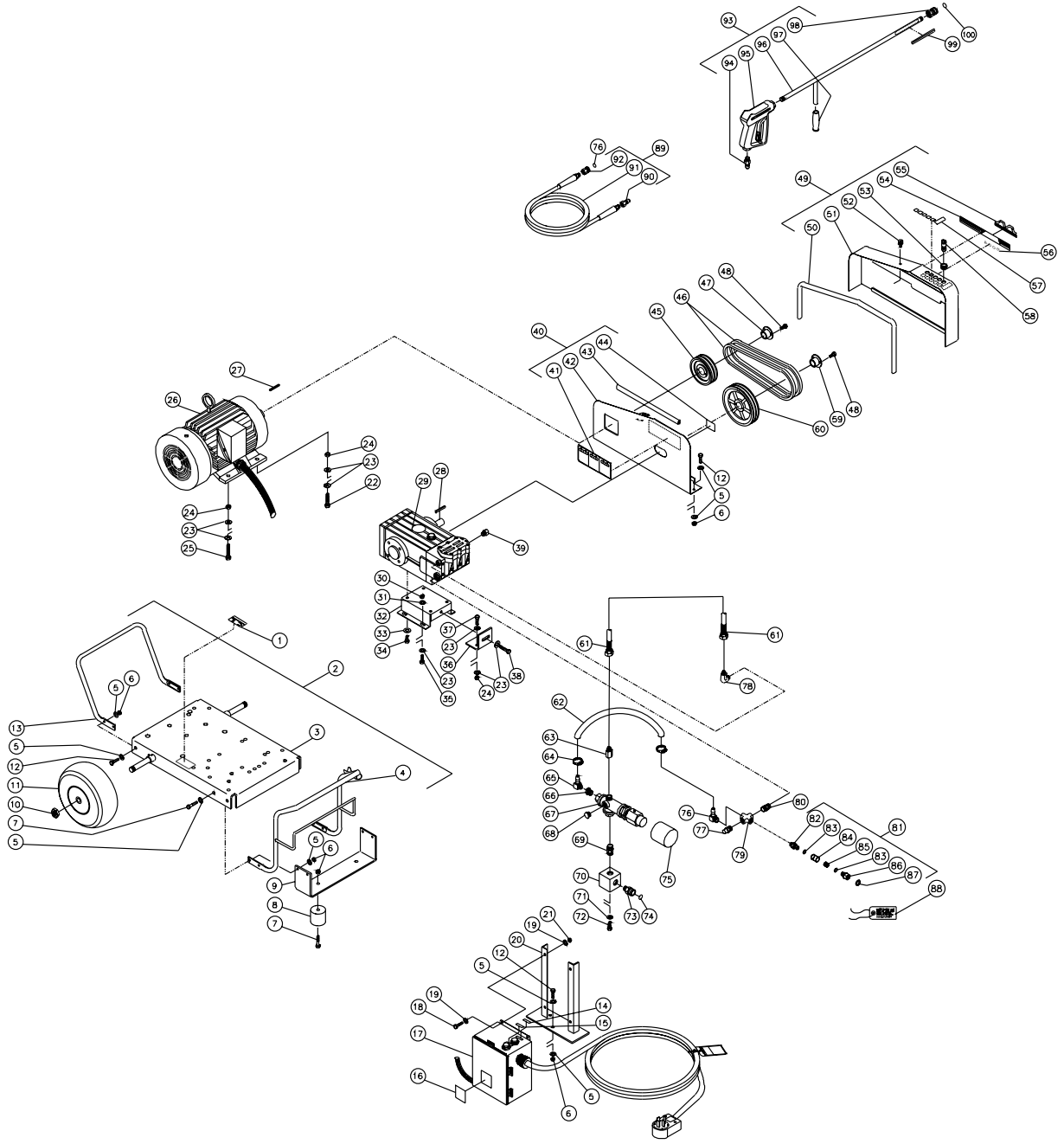

CW-5004-0ME3-102601-RD

©Copyright 2002, Mi-T-M Corporation®

FRAME ASSEMBLY FOR CW-5004-0ME3

REF. #	DESCRIPTION	PART #	QTY.	REF. #	DESCRIPTION	PART #	QTY.	REF. #	DESCRIPTION	PART #	QTY.
1	Decal- Data Plate	N/A	1	35	Bolt	27-0166	4	67	Unloader	8-0522	1
2	Base Plate Assembly (Inc. 3-13)	851-0333	1	36	Brace Tightener	13-0003A01	1	68	Plug	39-0017	1
3	Base Plate	5-0137A01	1	37	Bolt	27-0118	2	69	Nipple Fitting	24-0024	1
4	Handle	7-0102A01	1	38	Bolt	27-0576	1	70	Manifold Block	51-0012	1
5	Washer	28-0003	30	39	Safety Relief Valve	22-0319	1	71	Washer	29-0008	2
6	Locknut	30-0157	17	40	Beltguard Back Assembly (Inc. 41-44)	851-0335	1	72	Bolt	27-0116	2
7	Bolt	27-0068	6	41	Decal- Warning/Caution/Operation	34-0925	1	73	Quick Connect Socket	17-0029	1
8	Isolator	14-0008	2	42	Beltguard Back (See 851-0335)	N/A Sep.	1	74	O-ring (Replacement Only)	25-0123	-
9	Underbracket	13-0015A01	1	43	Edging *(Two Feet Required)	33-0020	1	75	Shrink Tube *(One Foot Required)	33-0272	1
10	Jamnut	30-0117	2	44	Decal- Warning: Beltguard Cover	34-0575	1	76	Hose Barb Fitting	23-0053	1
11	Wheel	14-0006	2	45	Sheave	10-0106	1	77	Heat-Dump Valve	22-0005	1
12	Bolt	27-0067	11	46	Belt	11-0047	2	78	Fitting	24-0092	1
13	Handle	7-0105A01	1	47	Bushing	9-0072	1	79	Cross Fitting	23-0071	1
14	Decal- Stop	34-0249	1	48	Bolt w/Bushing	27-0068	6	80	Fitting	23-0012	1
15	Decal- Run	34-0250	1	49	Beltguard Cover Assembly (Inc. 50-55)	850-0242	1	81	Filter Assembly (Inc. 82-87)	19-0206	1
16	Decal- Do not Spray	34-0391	1	50	Edging *(Four Feet Required)	33-0020	1	82	Inlet Filter (See 19-0206)	N/A Sep.	1
17	Control Box - 230V (See Exploded Drawing)	N/A Sep.	1	51	Beltguard Cover (See 850-0242)	N/A Sep.	1	83	O-ring	25-0517	1
18	Control Box - 480V (See Exploded Drawing)	N/A Sep.	1	52	Fastner	33-0197	1	84	Filter Sight Glass	19-0208	1
19	Bolt	27-0015	4	53	Grommet	33-0001	5	85	Strainer Screen	19-0209	1
-	Washer	28-0002	8	54	Decal- Mi-T-M Stripe	34-0501	1	86	Inlet Filter (See 19-0206)	N/A Sep.	1
20	Bracket	13-0127A01	1	55	Mi-T-M Logo	62-0087	1	87	Garden Hose Gasket	26-0001	1
21	Locknut	30-0155	4	56	Decal- Die Cut 5004	34-0834	1	88	Tag- Water Supply Inlet	34-0097	1
22	Bolt	27-0120	2	57	Decal- Die Cut Nozzles	34-0500	1	89	Pressure Hose Assembly (Inc. 90-92)	851-0317	1
23	Washer	28-0023	17	58	Spray Nozzle- 0003.5	18-0257	1	90	Quick Connect Plug	17-0006	1
24	Locknut	30-0159	6	-	Spray Nozzle- 1503.5	18-0258	1	91	Pressure Hose	15-0178	1
25	Bolt	27-0119	2	-	Spray Nozzle- 2503.5	18-0259	1	92	Quick Connect Socket	17-0004	1
26	Motor- 15 H.P.	2-0018	1	-	Spray Nozzle- 4003.5	18-0260	1	93	Gun/Wand Assembly (Inc. 94-98)	851-0309	1
27	Key	43-0078	1	59	Bushing	9-0073	1	94	Quick Connect Plug	17-0005	1
28	Key w/Pump	43-0028	1	60	Sheave	10-0107	1	95	Gun	16-0343	1
29	Pump	3-0169	1	61	Hose	15-0177	1	96	Wand- w/ 36" Handle	16-0342A01	1
30	Locknut	30-0161	4	62	By-Pass Hose *(Two Feet Required)	15-0007	1	97	Grip Handle	7-0002	1
31	Washer	28-0030	4	63	Adapter	24-0150	1	98	Quick Connect Socket	17-0036	1
32	Pump Bracket	5-0101A01	1	64	Hose Clamp	42-0011	2	99	Decal- Risk of Injection	34-0572	1
33	Washer w/Pump	29-0054	4	65	Fitting	23-0050	1	100	O-ring (Replacement Only)	25-0122	-
34	Bolt w/Pump	27-8042	4	66	Bushing	23-0016	1	*Must Order in One Foot Lengths			

©Copyright 2002, Mi-T-M Corporation®

PUMP ASSEMBLY (3-0169)

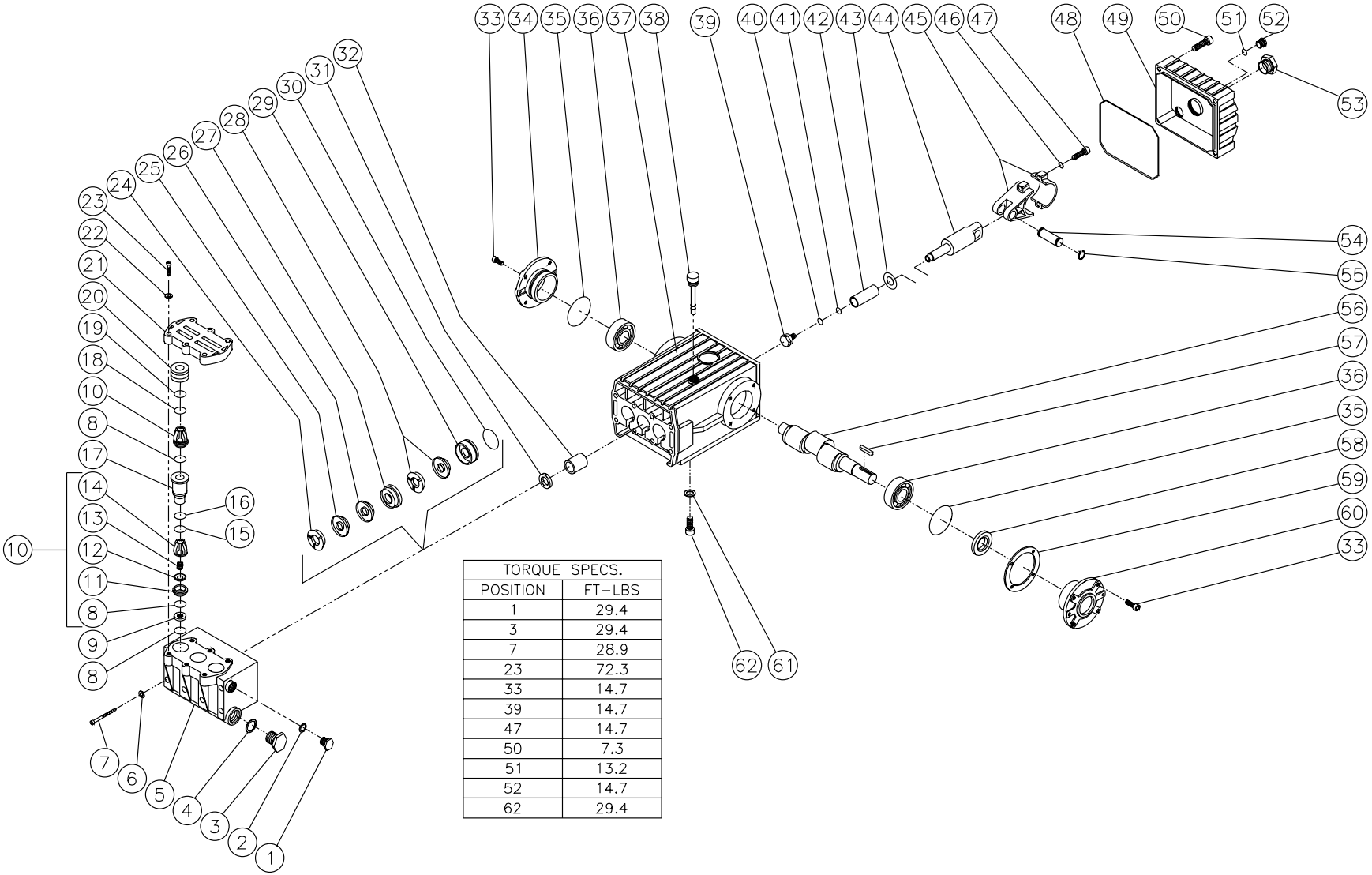

TORQUE SPECS.	
POSITION	FT-LBS
1	29.4
3	29.4
7	28.9
23	72.3
33	14.7
39	14.7
47	14.7
50	7.3
51	13.2
52	14.7
62	29.4

3-0169-050200-RD

©Copyright 2002, Mi-T-M Corporation®

PUMP ASSEMBLY (3-0169)

REF. #	DESCRIPTION	PART #	QTY.	REF. #	DESCRIPTION	PART #	QTY.	REF. #	DESCRIPTION	PART #	QTY.
1	Plug	39-0018	1	24	High Pressure Head Ring (See 70-0211)	N/A Sep.	3	47	Bolt	27-8435	6
2	Washer	28-0600	1	25	High Pressure V-Packing (See 70-0211)	N/A Sep.	3	48	O-ring	25-0339	1
3	Plug	39-0019	1	26	V-Packing Support (See 70-0211)	N/A Sep.	3	49	Crankcase Cover	46-0295	1
4	Washer	28-0601	1	27	High Pressure Intermediate Seal Retainer (See 70-0211)	N/A Sep.	3	50	Bolt	27-8404	5
5	Manifold	46-0770	1	28	Low Pressure Seal (See 70-0211)	N/A Sep.	3	51	Oil Level Indicator	46-0114	1
6	Washer	28-0210	8	29	Low Pressure Seal Retainer	46-0286	3	52	Plug	39-0017	1
7	Bolt	27-8239	8	30	O-ring	25-0015	3	53	O-ring	25-0014	1
8	O-ring (See 70-0212)	N/A Sep.	8	31	Oil Seal (See 70-0208)	N/A Sep.	3	54	Connecting Rod Pin	43-0032	3
9	Spacer	46-0771	3	32	Bushing	9-0029	3	55	Retaining Ring	46-0103	6
10	Valve Assembly (Inc. 8, 11-14) (See 70-0212)	N/A Sep.	6	33	Bolt	27-8431	8	56	Crankshaft	46-0776	1
11	Valve Seat (See 70-0212)	N/A Sep.	6	34	Crankcase Cover- Closed	46-0336	1	57	Key	43-0048	1
12	Valve Plate (See 70-0212)	N/A Sep.	6	35	O-ring	25-0013	2	58	Oil Seal (See 70-0209)	N/A Sep.	1
13	Valve Spring (See 70-0212)	N/A Sep.	6	36	Bearing	48-0012	2	59	Shim	46-0113	1
14	Valve Cage (See 70-0212)	N/A Sep.	6	37	Crankcase	46-0292	1	60	Crankcase Cover- Open	46-0296	1
15	Back-up Ring	25-0430	3	38	Oil Dip Stick	46-0144	1	61	Lockwasher	29-0055	4
16	O-ring	25-0160	3	39	Piston Screw	46-0285	3	62	Bolt	27-8471	4
17	Guide	46-0772	3	40	Plunger	46-0337	3		Valve Assembly (6 each 10)	70-0212	
18	O-ring	25-0151	3	41	O-ring	25-0138	3		Head Ring Kit (3 each 24)	70-0031	
19	Back-up Ring	25-0431	3	42	Back-up Ring	25-0137	3		V-Packing Kit (3 each 25, 26, 28)	70-0042	
20	Cap	46-0773	3	43	Washer	46-0283	3		Oil Seal Kit (3 each 31)	70-0208	
21	Valve Cover Plate	46-0774	1	44	Piston Rod	46-0294	3		Oil Seal Kit (2 each 58)	70-0209	
22	Lockwasher	29-0156	6	45	Connecting Rod	46-0051	3		Intermediate Retainer (Inc. 24-30)	70-0210	
23	Bolt	27-8492	6	46	Lockwasher	29-0154	6		Packing Assembly (Inc. 24-30)	70-0211	

©Copyright 2002, Mi-T-M Corporation®

UNLOADER ASSEMBLY (8-0522)

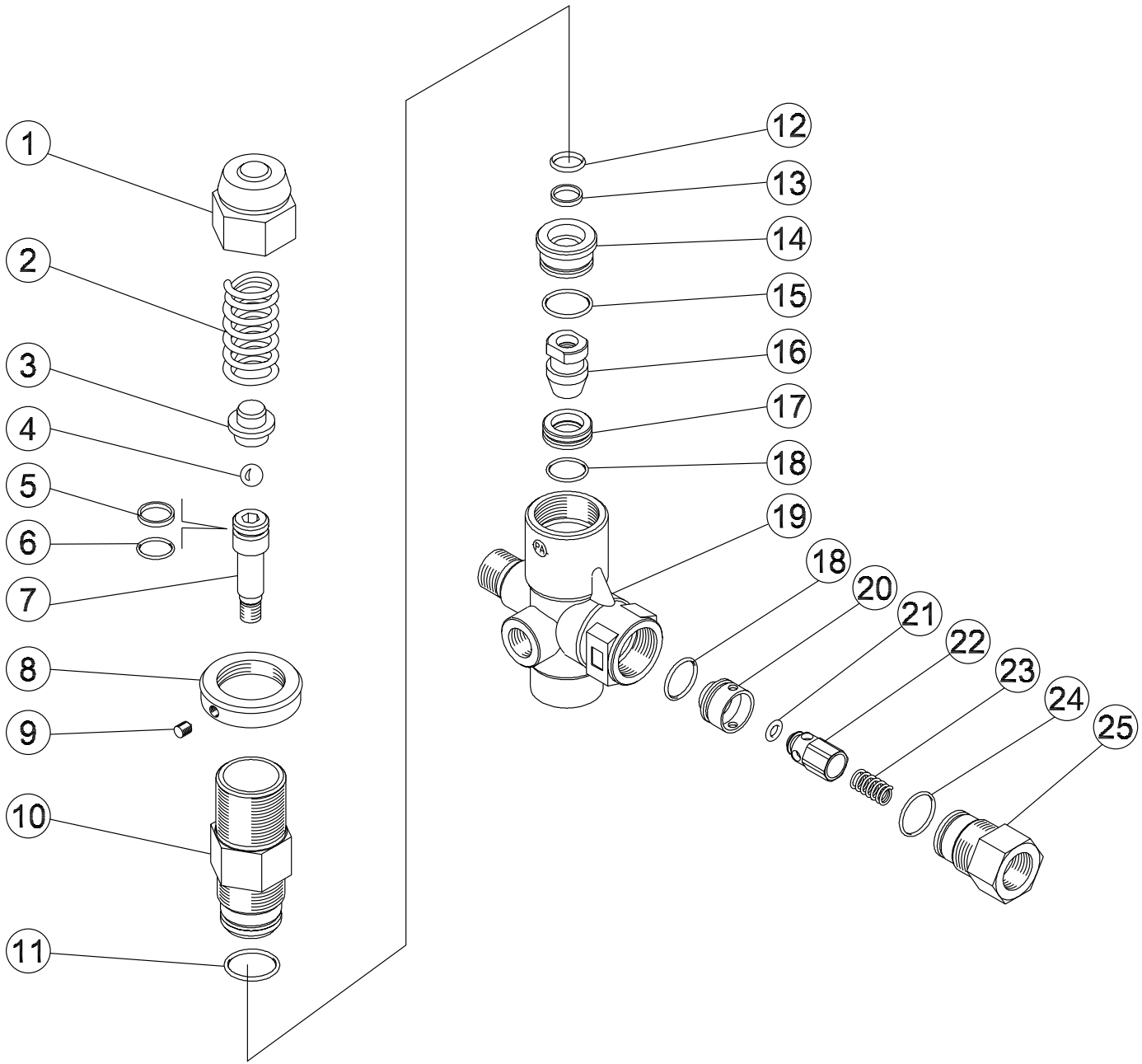

8-0522-120501-RD

©Copyright 2002, Mi-T-M Corporation®

8-0522-120501-RD

UNLOADER ASSEMBLY (8-0522)							
REF. #	**DESCRIPTION**	**PART #**	**QTY.**	**REF. #**	**DESCRIPTION**	**PART #**	**QTY.**
1	Brass Cap	8-0534	1	15	O-ring	25-0368	1
2	Spring	49-0149	1	16	Shutter	8-0540	1
3	Spring Guide	8-0535	1	17	Seat	8-0541	1
4	Ball	8-0318	1	18	O-ring	25-0220	2
5	Back-up Ring (See 70-0342)	N/A Sep.	1	19	Valve Body	8-0542	1
6	O-ring (See 70-0342)	N/A Sep.	1	20	Check Valve Seat	8-0543	1
7	Piston	8-0536	1	21	O-ring	25-0369	1
8	Lock Ring	8-0537	1	22	Check Valve	8-0486	1
9	Set Screw	8-0408	1	23	Spring	49-0150	1
10	Piston Housing	8-0538	1	24	O-ring	25-0325	1
11	O-ring	25-0189	1	25	Nipple	8-0485	1
12	Back-up Ring (See 70-0343)	N/A Sep.	1		Upper Seal Kit (Inc. 5, 6)	70-0342	1
13	O-ring (See 70-0343)	N/A Sep.	1		Lower Seal Kit (Inc. 12, 13)	70-0343	1
14	Spacer	8-0539	1				

©Copyright 2002, Mi-T-M Corporation®

GUN ASSEMBLY (16-0343)

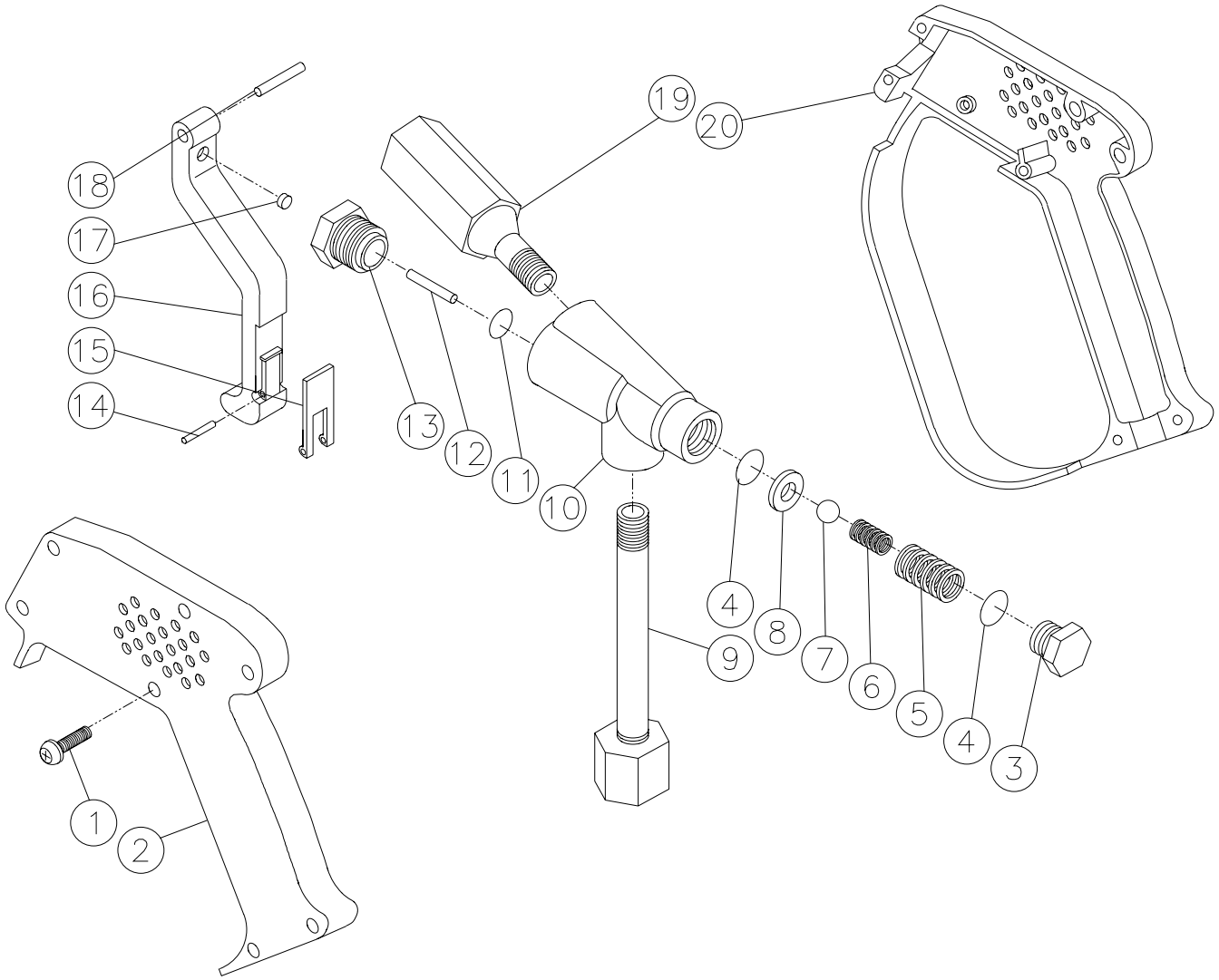

16-0343-042800-RD

©Copyright 2002, Mi-T-M Corporation®

GUN ASSEMBLY (16-0343)							
REF. #	**DESCRIPTION**	**PART #**	**QTY.**	**REF. #**	**DESCRIPTION**	**PART #**	**QTY.**
1	Screw	27-8851	7	12	Control Pin (See 70-0213)	N/A Sep.	1
2	Housing- Left Side	16-0344	1	13	Guide Sleeve	16-0048	1
3	Cap	23-0336	1	14	Lock Pin	43-0025	1
4	O-ring (See 70-0213)	N/A Sep.	2	15	Safety Lock	16-0347	1
5	Spring (See 70-0213)	N/A Sep.	1	16	Trigger	16-0348	1
6	Valve Spring (See 70-0213)	N/A Sep.	1	17	Cam Trigger (See 70-0213)	N/A Sep.	1
7	Valve Ball (See 70-0213)	N/A Sep.	1	18	Pin	43-0024	1
8	Valve Seat (See 70-0213)	N/A Sep.	1	19	Discharge Tube Assembly	16-0349	1
9	Inlet Tube Assembly	16-0345	1	20	Housing- Right Side	16-0350	1
10	Valve Body	16-0346	1		Repair Kit (Inc. 4-8, 11, 12, 17)	70-0213	
11	O-ring (See 70-0213)	N/A Sep.	1				

©Copyright 2002, Mi-T-M Corporation®

CONTROL BOX ASSEMBLY (230 VOLT)

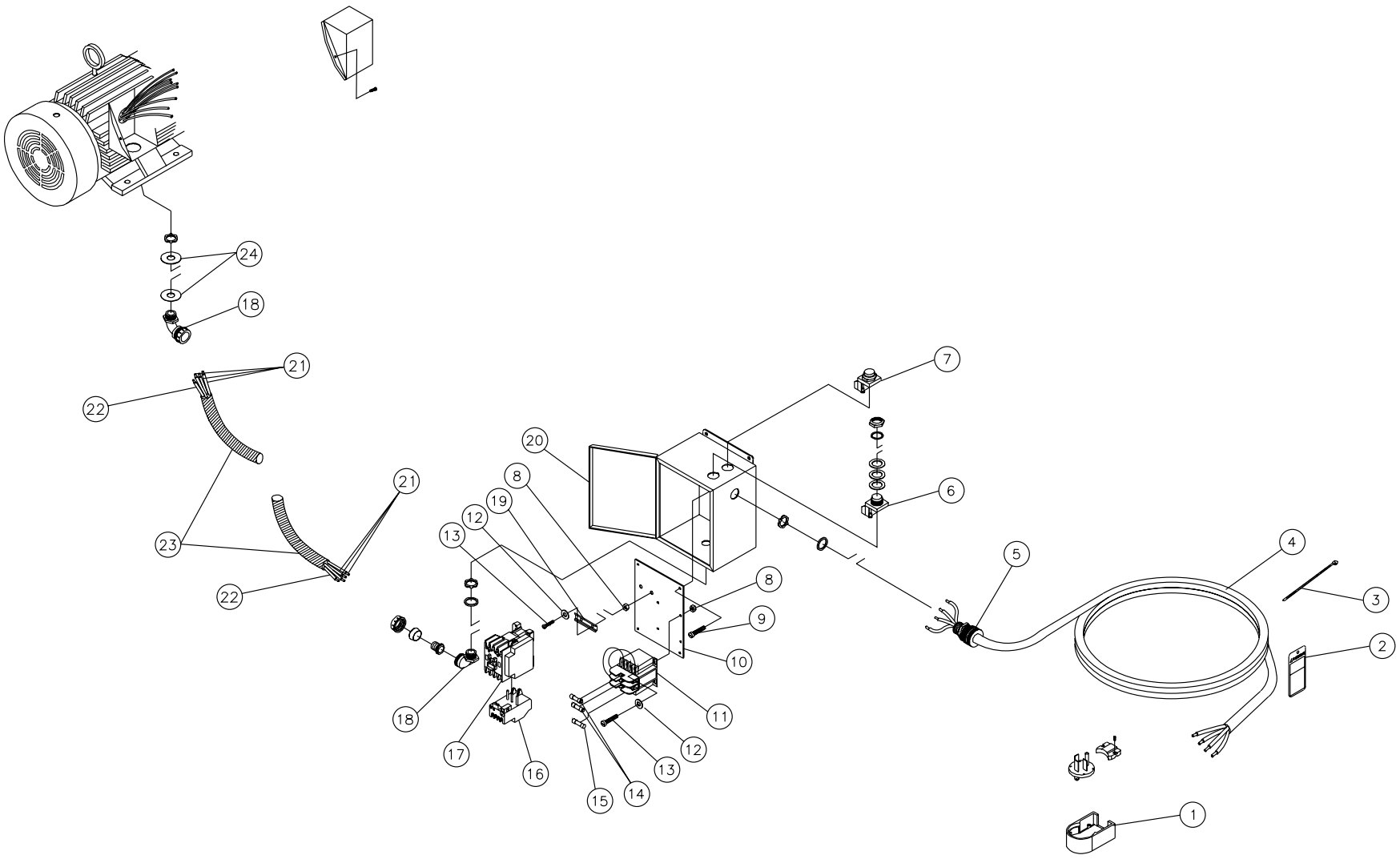

CW-A-0001-081399-RD

©Copyright 2002, Mi-T-M Corporation®

CONTROL BOX ASSEMBLY (230 VOLT)			
REF #	**DESCRIPTION**	**PART #**	**QTY**
1	Plug	32-0647	1
2	Tag- Warning: Risk of Electrocution	34-0330	1
3	Cable Tie	33-0022	1
4	Cord *(Ten Feet Required)	32-0123	1
5	Cord Strain Relief	32-0040	1
6	Switch- Red	32-0306	1
7	Switch- Green	32-0305	1
8	Locknut	30-8152	6
9	Bolt (See 32-0455)	N/A Sep.	4
10	Panel	32-0456	1
11	Transformer	32-0618	1
12	Washer	28-0010	6
13	Bolt	27-8927	6
14	Fuse- 600V	32-0469	2
15	Fuse- 125V	32-0619	1
16	Overload Relay	32-0490	1
17	Contactor	32-0598	1
18	Conduit	32-0487	2
19	Din Rail *(One Foot Required)	32-0316	1
20	Control Box	32-0455	1
21	Wire- Black *(Six Feet Required)	32-0501	1
22	Wire- Green *(Two Feet Required)	32-0622	1
23	Conduit *(One Foot Required)	32-0486	1
24	Washer	32-0648	2
*Must Order in One Foot Lengths			

©Copyright 2002, Mi-T-M Corporation®

WIRING SCHEMATIC (230 VOLT)

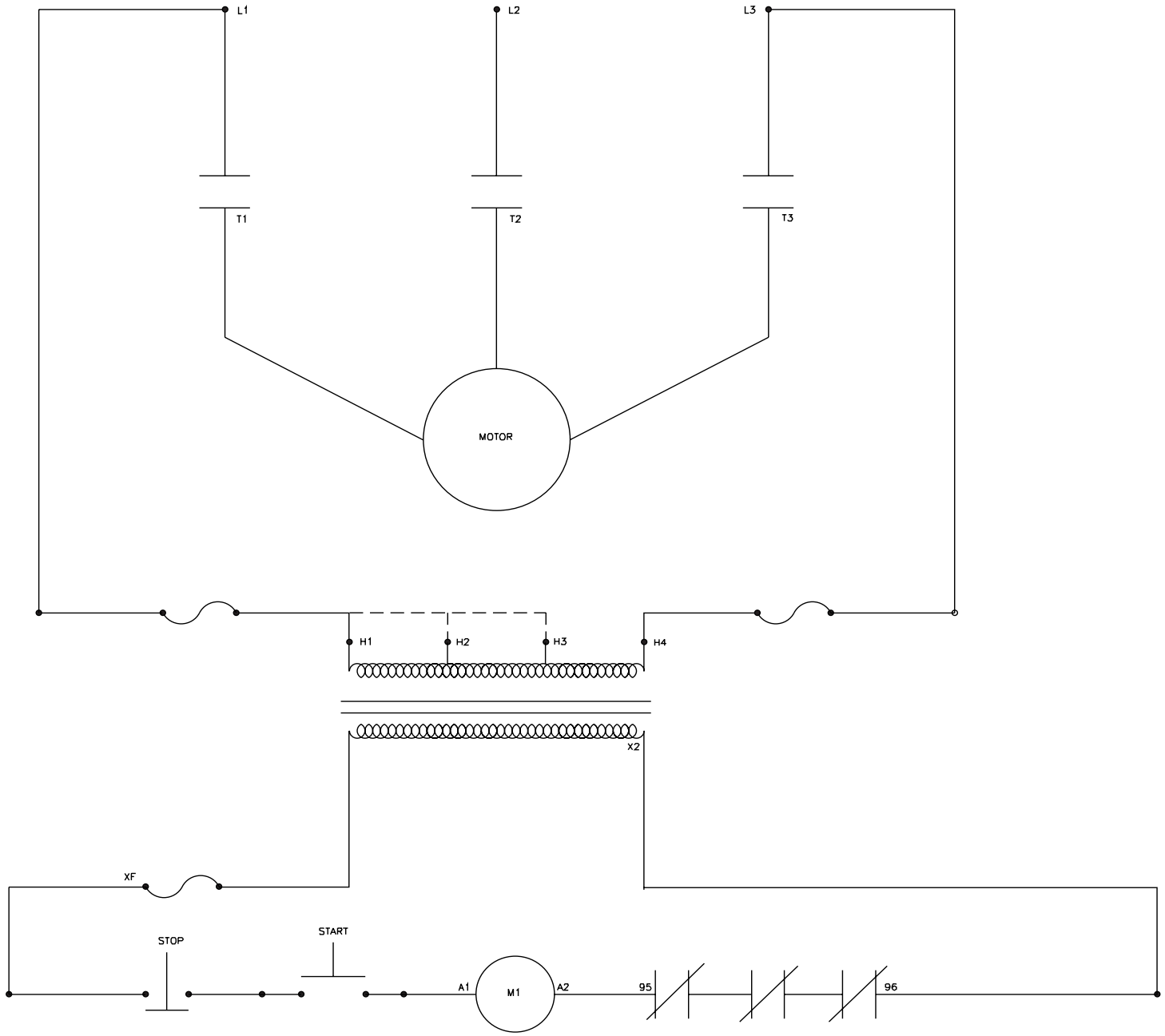

CW-WD-0001-112700-RD

©Copyright 2002, Mi-T-M Corporation®

WIRING DIAGRAM (230 VOLT)

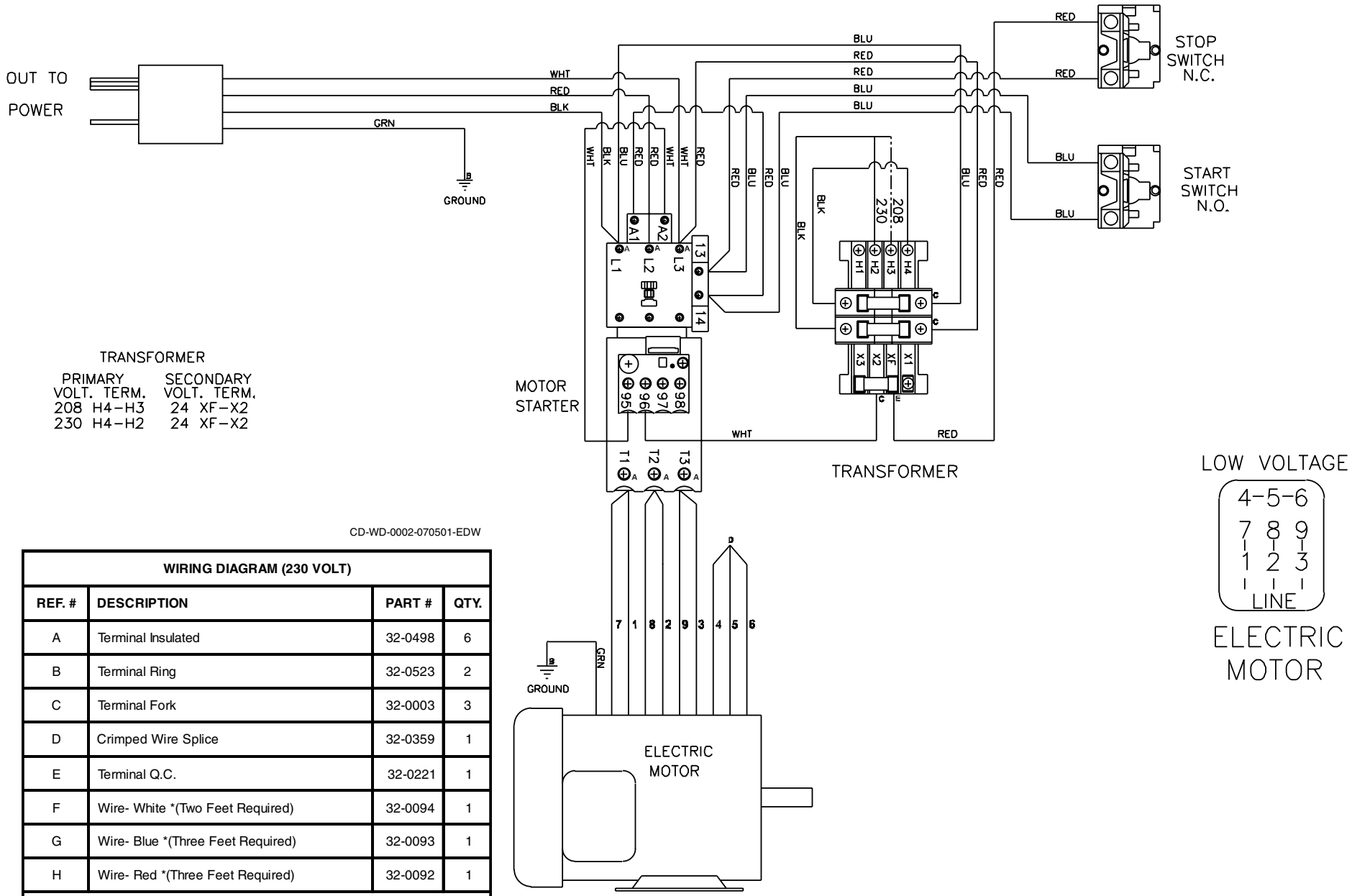

CD-WD-0002-070501-EDW

WIRING DIAGRAM (230 VOLT)			
REF. #	**DESCRIPTION**	**PART #**	**QTY.**
A	Terminal Insulated	32-0498	6
B	Terminal Ring	32-0523	2
C	Terminal Fork	32-0003	3
D	Crimped Wire Splice	32-0359	1
E	Terminal Q.C.	32-0221	1
F	Wire- White *(Two Feet Required)	32-0094	1
G	Wire- Blue *(Three Feet Required)	32-0093	1
H	Wire- Red *(Three Feet Required)	32-0092	1
*Must Order in One Foot Lengths			

CW-WD-0002-070501-EDW

©Copyright 2002, Mi-T-M Corporation®

CONTROL BOX ASSEMBLY (CX-0057 OPTION) (460 VOLT)

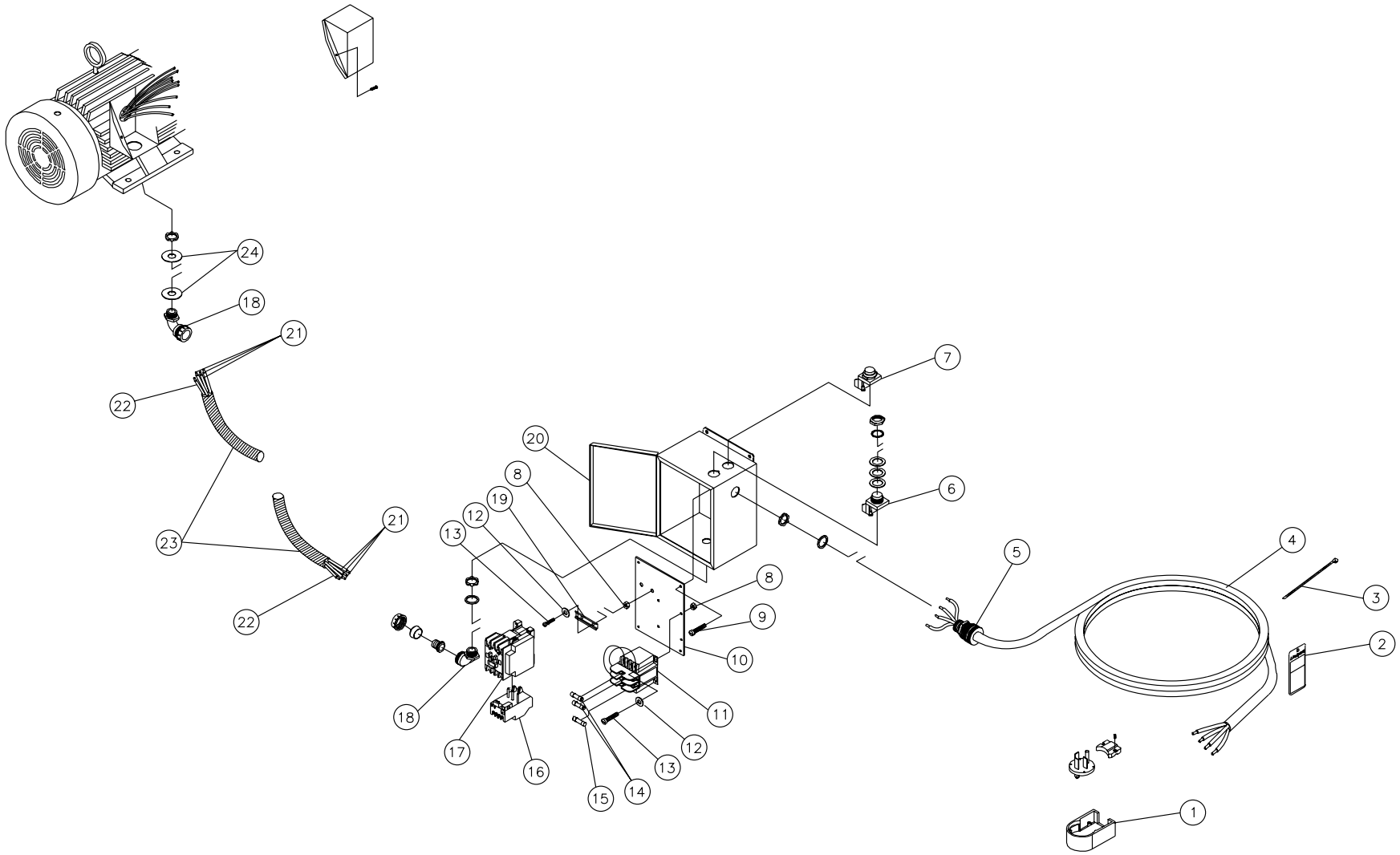

CW-A-0002-060899-RD

©Copyright 2002, Mi-T-M Corporation®

CONTROL BOX ASSEMBLY (CX-0057 OPTION) (460 VOLT)							
REF #	**DESCRIPTION**	**PART #**	**QTY**	**REF #**	**DESCRIPTION**	**PART #**	**QTY**
1	Plug	32-0146	1	14	Fuse- 600V	32-0325	2
2	Tag- Warning: Risk of Electrocution	34-0330	1	15	Fuse- 125V	32-0323	1
3	Cable Tie	33-0022	1	16	Overload Relay	32-0483	1
4	Cord *(Ten Feet Required)	32-0023	1	17	Contactor	32-0597	1
5	Cord Strain Relief	9-0046	1	18	Conduit	32-0487	2
6	Switch- Red	32-0306	1	19	Din Rail *(One Foot Required)	32-0316	1
7	Switch- Green	32-0305	1	20	Control Box	32-0455	1
8	Locknut	30-8152	6	21	Wire- Black *(Six Feet Required)	32-0501	1
9	Bolt (See 32-0455)	N/A Sep.	4	22	Wire- Green *(Two Feet Required)	32-0622	1
10	Panel	32-0456	1	23	Conduit *(One Foot Required)	32-0486	1
11	Transformer	32-0313	1	24	Washer	32-0648	2
12	Washer	28-0010	6	*Must Order in One Foot Lengths			
13	Bolt	27-8927	6				

©Copyright 2002, Mi-T-M Corporation®

WIRING SCHEMATIC (460 VOLT)

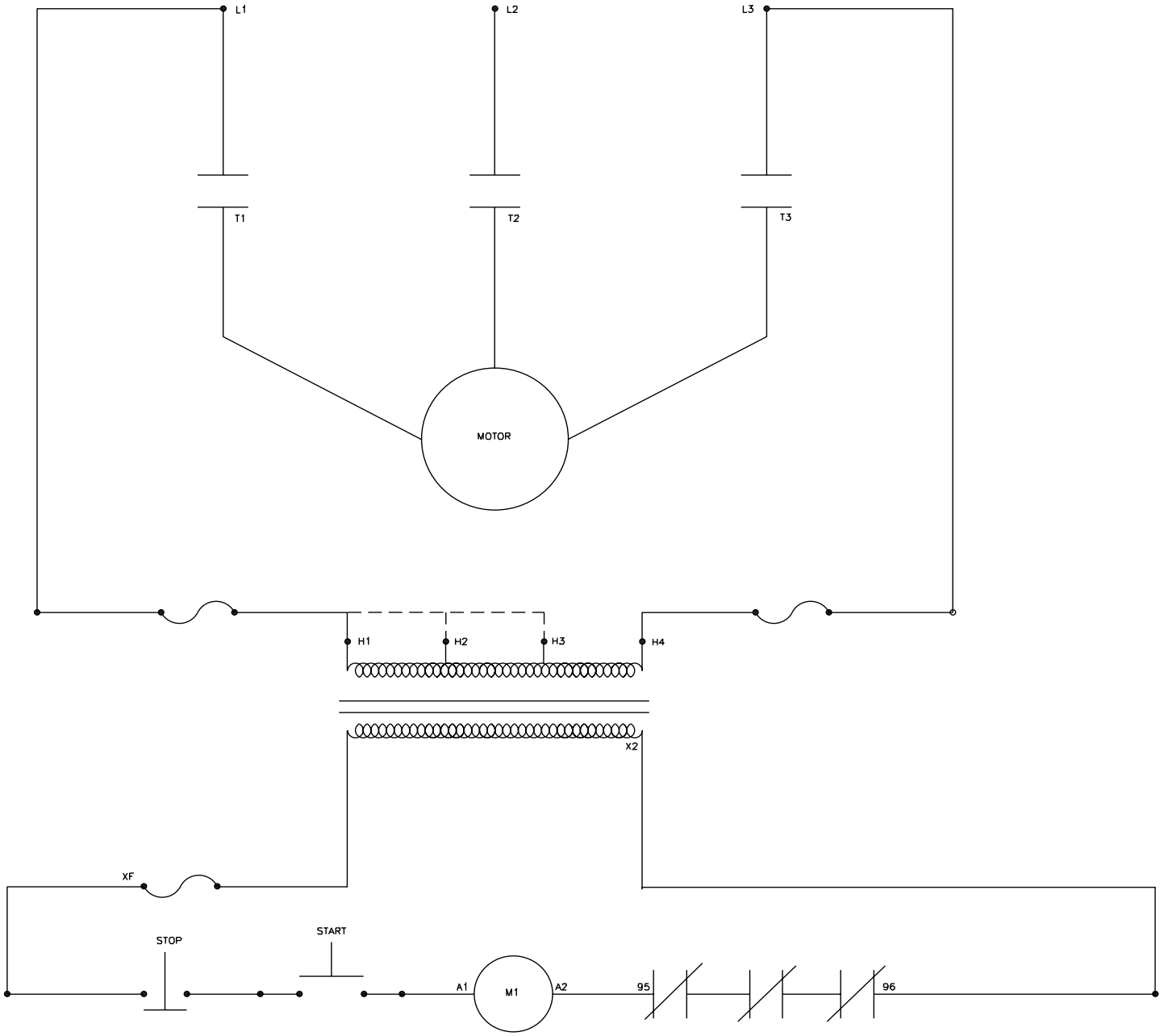

CW-WD-0001-112700-RD

©Copyright 2002, Mi-T-M Corporation®

WIRING DIAGRAM (460 VOLT)

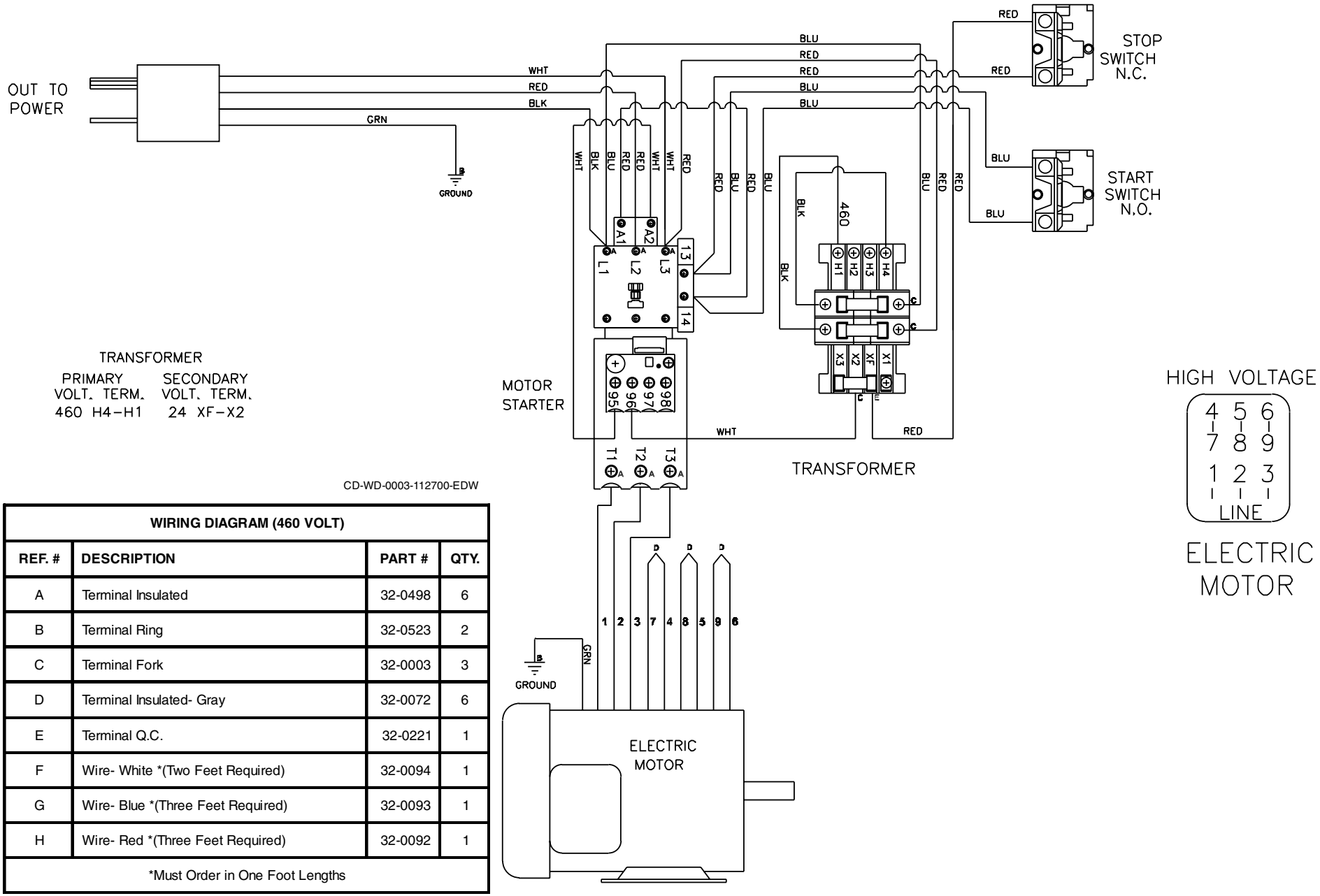

CD-WD-0003-112700-EDW

WIRING DIAGRAM (460 VOLT)			
REF. #	**DESCRIPTION**	**PART #**	**QTY.**
A	Terminal Insulated	32-0498	6
B	Terminal Ring	32-0523	2
C	Terminal Fork	32-0003	3
D	Terminal Insulated- Gray	32-0072	6
E	Terminal Q.C.	32-0221	1
F	Wire- White *(Two Feet Required)	32-0094	1
G	Wire- Blue *(Three Feet Required)	32-0093	1
H	Wire- Red *(Three Feet Required)	32-0092	1
*Must Order in One Foot Lengths			

CW-WD-0003-112700-EDW

©Copyright 2002, Mi-T-M Corporation®

©Copyright 2002, Mi-T-M Corporation®