Mi-T-M® CORPORATION

8650 Enterprise Drive, Peosta IA 52068
563-556-7484 / Fax 563-556-1235

PARTS LIST FOR

CW-4004-3MV0

(AFTER SERIAL #317278)

Engine Oil Grade:	**Above 40°F=SAE 30** **Below 40°F=SAE10W-30**
Engine Oil Capacity:	**56 oz.**
Pump Oil Grade:	**Mi-T-M Pump Oil #AW-4085-0016**
Pump Oil Capacity:	**40.6 oz.**
Nozzle Size:	**4.0**

©Copyright 2002, Mi-T-M Corporation®

This Parts Listing has been compiled for your benefit. You can be assured your Mi-T-M Cold Water Pressure Washer was constructed and designed with quality and performance in mind using over 25 years experience in the pressure washer business. Each component has been rigorously tested to insure the highest level of acceptance.

The contents of this Parts Listing are based on the latest product information available at the time of publication. Mi-T-M reserves the right to make changes in price, color, materials, equipment, specifications or models at any time without notice.

WARNING

THIS IS A PROFESSIONAL HIGH PRESSURE, COLD WATER PRESSURE WASHER. CAUTION SHOULD BE OBSERVED WHEN USING OR REPAIRING THIS UNIT! READ AND FOLLOW THE SAFETY WARNINGS LISTED BELOW BEFORE ATTEMPTING ANY REPAIRS ON THIS PRESSURE WASHER!

SAFETY WARNINGS

1. NEVER alter or modify the equipment. Be sure any accessory items and system components being used will withstand the pressure developed. Use only genuine Mi-T-M parts for repair of your pressure washer. Failure to do so can cause hazardous operating conditions and will VOID warranty.

2. NEVER make adjustments on machinery while the unit is connected to the power source. Turning over the machinery by hand during adjustment or cleaning might start the machinery, causing serious injury to the operator.

3. Know how to stop and bleed pressures quickly. Be thoroughly familiar with controls.

4. Before servicing the unit, turn unit off, relieve the water pressure and allow the unit to cool down. Do not make repairs while the unit is running. Service in a clean, dry, flat area.

5. After testing the machine, DO NOT leave the pressurized unit unattended. Shut off the unit and release trapped pressure before leaving.

Table of Contents

SPECIFICATIONS **3**
FRAME ASSEMBLY FOR CW-4004-3MV0 ..... **4**
PUMP ASSEMBLY (3-0075) **6**
UNLOADER ASSEMBLY (8-0270) **8**
GUN ASSEMBLY (16-0001) **10**

©Copyright 2002, Mi-T-M Corporation®

SPECIFICATIONS

CW-4004-3MV0

MODEL NUMBER	CW-4004-3MV0
Operating Pressure (PSI/Bar):	4000/275.8
High Pressure Nozzle:	4.0
Water Volume (GPM/lpm):	4.0/15.1
Engine:	Briggs & Stratton
Horsepower	16.0
Engine Type	Four Stroke, Overhead Valve, Single Cylinder
Oil Type	Above 40 F=SAE 30/Below 40 F=SAE10W-30
Oil Capacity (oz./liter)	56/1.7
Low Oil Protection	Oil Guard
Fuel Type	Unleaded Gasoline 86 Octane Minimum
Fuel Capacity (gal./liter)	2.25/8.5
Starting	Recoil Rope
Maximum No Load RPM	3600 (+/- 100)
Pump:	Direct Driven, Oil Bath, Triplex Piston
Oil Type	Mi-T-M Pump Oil #AW-4085-0016
Oil Capacity (oz./liters)	40.6/1.2
Plungers	Ceramic Coated
Manifold	Forged Brass
Valves	Stainless Steel
Unloader	Preset
Heat Dump Valve	Relieves heated water during unloader bypass stage
Detergent Injector	Adjustable low pressure down stream from pump
Unit Net Weight (lbs/Kg)	249/113
Unit Shipping Weight (lbs/Kg)	327/148
Unit Net Dimension (in/cm)	46Lx28Wx30H/ 117Lx71Wx76H
Unit Shipping Dimension (in/cm)	49Lx30.5Wx35.5H/ 124Lx77.5Wx90H

©Copyright 2002, Mi-T-M Corporation®

FRAME ASSEMBLY FOR CW-4004-3MV0

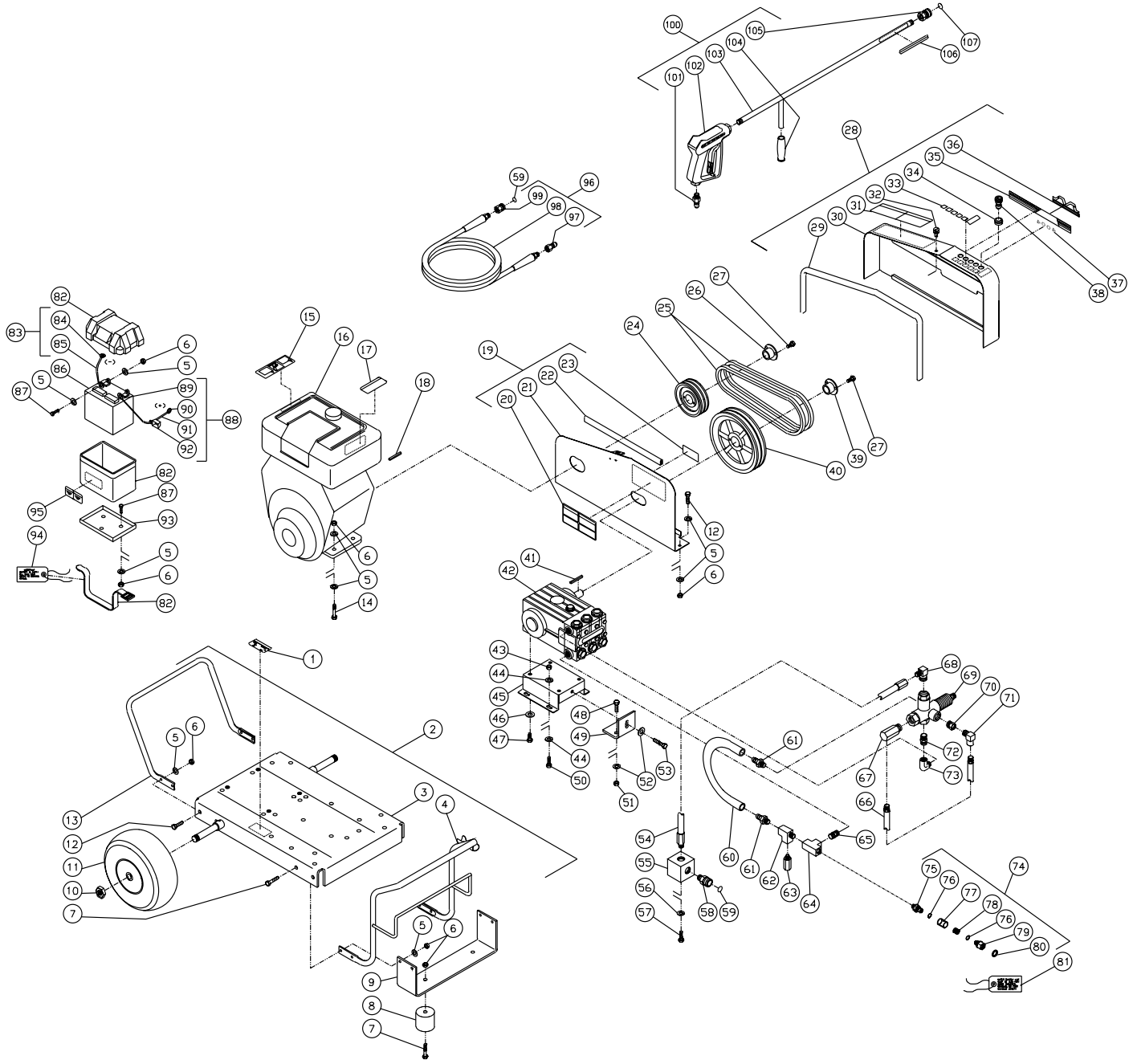

CW-4004-3MV0-090701-RD

©Copyright 2002, Mi-T-M Corporation®

FRAME ASSEMBLY FOR CW-4004-3MV0

REF. #	DESCRIPTION	PART #	QTY.
1	Decal- Data Plate	N/A	1
2	Base Plate Assembly (Inc. 3-13)	851-0235	1
3	Base Plate	5-0078A01	1
4	Handle	7-0101A01	1
5	Washer	28-0003	31
6	Locknut	30-0157	23
7	Bolt	27-0068	6
8	Isolator	14-0008	2
9	Underbracket	13-0042A01	1
10	Jamnut	30-0117	2
11	Wheel	14-0006	2
12	Bolt	27-0067	8
13	Handle	7-0111A01	1
14	Bolt	27-0070	4
15	Decal- Warning: Muffler Hot (E/S)	34-0598	1
16	Decal- Caution: Allow to Cool (E/S)	34-0599	1
17	Engine- 16 H.P. Vanguard	851-0099	1
18	Key	43-0078	1
19	Beltguard Back Assembly (Inc. 20-23)	851-0215	1
20	Decal- Warning/Caution (E/S)	34-0812	1
21	Beltguard Back (See 851-0215)	N/A Sep.	1
22	Edging *(Two Feet Required)	33-0020	1
23	Decal- Warning: Beltguard Cover (E/S)	34-0826	1
24	Sheave	10-0064	1
25	Belt	11-0009	2
26	Bushing	9-0005	1
27	Bolt	27-0015	1
28	Beltguard Cover Assembly (Inc. 29-36)	851-0216	1
29	Edging *(Four Feet Required)	33-0020	1
30	Beltguard Cover (See 851-0216)	N/A Sep.	1
31	Decal- Operating Instructions (E/S)	34-0813	1
32	Fastner	33-0197	1
33	Decal- Die Cut Nozzles	34-0500	1
34	Grommet	33-0001	5
35	Decal- Mi-T-M Stripe	34-0501	1
36	Mi-T-M Logo	62-0086	1
37	Decal- Die Cut 4004	34-0261	1
38	Spray Nozzle- 0004	18-0028	1
-	Spray Nozzle- 1504	18-0029	1
-	Spray Nozzle- 2504	18-0030	1
-	Spray Nozzle- 4004	18-0031	1
39	Bushing	9-0017	1
40	Sheave	10-0040	1
41	Key w/Pump	43-0028	1
42	Pump	3-0075	1
43	Locknut	30-0161	4
44	Washer	28-0030	8
45	Pump Bracket	5-0101A01	1
46	Washer w/Pump	29-0055	4
47	Bolt w/Pump	27-8471	4
48	Bolt	27-0118	2
49	Brace Tightener	13-0003A01	1
50	Bolt	27-0166	4
51	Locknut	30-0159	2
52	Washer	28-0023	3
53	Bolt	27-0576	1
54	Hose	15-0141	1
55	Manifold Block	51-0012	1
56	Washer	29-0008	2
57	Bolt	27-0116	2
58	Quick Connect Socket	17-0029	1
59	O-ring (Replacement Only)	25-0123	-
60	By-Pass Hose	15-0022	1
61	Hose Barb	23-0005	2
62	Street Tee	23-0124	1
63	Heat Dump Valve	22-0005	1
64	Tee	23-0043	1
65	Hex Nipple	23-0012	1
66	Hose	15-0140	1
67	Easy Start Valve	22-0146	1
68	Elbow	24-0074	1
69	Unloader	8-0270	1
70	Hex Reducer	23-0056	1
71	Elbow	23-0237	1
72	Hex Nipple	24-0024	1
73	Elbow	24-0105	1
74	Filter Assembly (Inc. 75-80)	19-0206	1
75	Inlet Filter (See 19-0206)	N/A Sep.	1
76	O-ring	25-0517	2
77	Filter Sight Glass	19-0208	1
78	Strainer Screen	19-0209	1
79	Inlet Filter (See 19-0206)	N/A Sep.	1
80	Garden Hose Gasket	26-0001	1
81	Tag- Water Supply Inlet	34-0097	1
82	Battery Box	33-0092	1
83	Battery Cable Assembly (Inc. 84-85)	851-0344	1
84	Battery Terminal	32-0097	2
85	Battery Cable (Neg.) *(Two Feet Required)	32-0065	1
86	Battery	32-0058	1
87	Bolt	27-0066	4
88	Battery Cable Assembly (Inc. 89-92)	851-0082	1
89	Battery Terminal	32-0097	1
90	Battery Terminal	32-0098	1
91	Battery Cable (Pos.) *(Two Feet Required)	32-0065	1
92	Battery Cable Cover	33-0004	1
93	Battery Retainer	20-0264A01	1
94	Tag- Battery	34-0096	1
95	Decal- Caution: Disconnect Battery (E/S)	34-0848	1
96	Pressure Hose Assembly (Inc. 97-99)	851-0006	1
97	Quick Connect Plug	17-0006	1
98	Pressure Hose	15-0004	1
99	Quick Connect Socket	17-0004	1
100	Gun/Wand Assembly (Inc. 101-105)	851-0095	1
101	Quick Connect Plug	17-0005	1
102	Gun	16-0001	1
103	Wand w/ 36" Handle	16-0120A01	1
104	Grip Handle	7-0002	1
105	Quick Connect Socket	17-0001	1
106	Decal- Warning: Risk of Injection (E/S)	34-1253	1
107	O-ring (Replacement Only)	25-0122	-

*Must Order in One Foot Lengths

©Copyright 2002, Mi-T-M Corporation®

PUMP ASSEMBLY (3-0075)

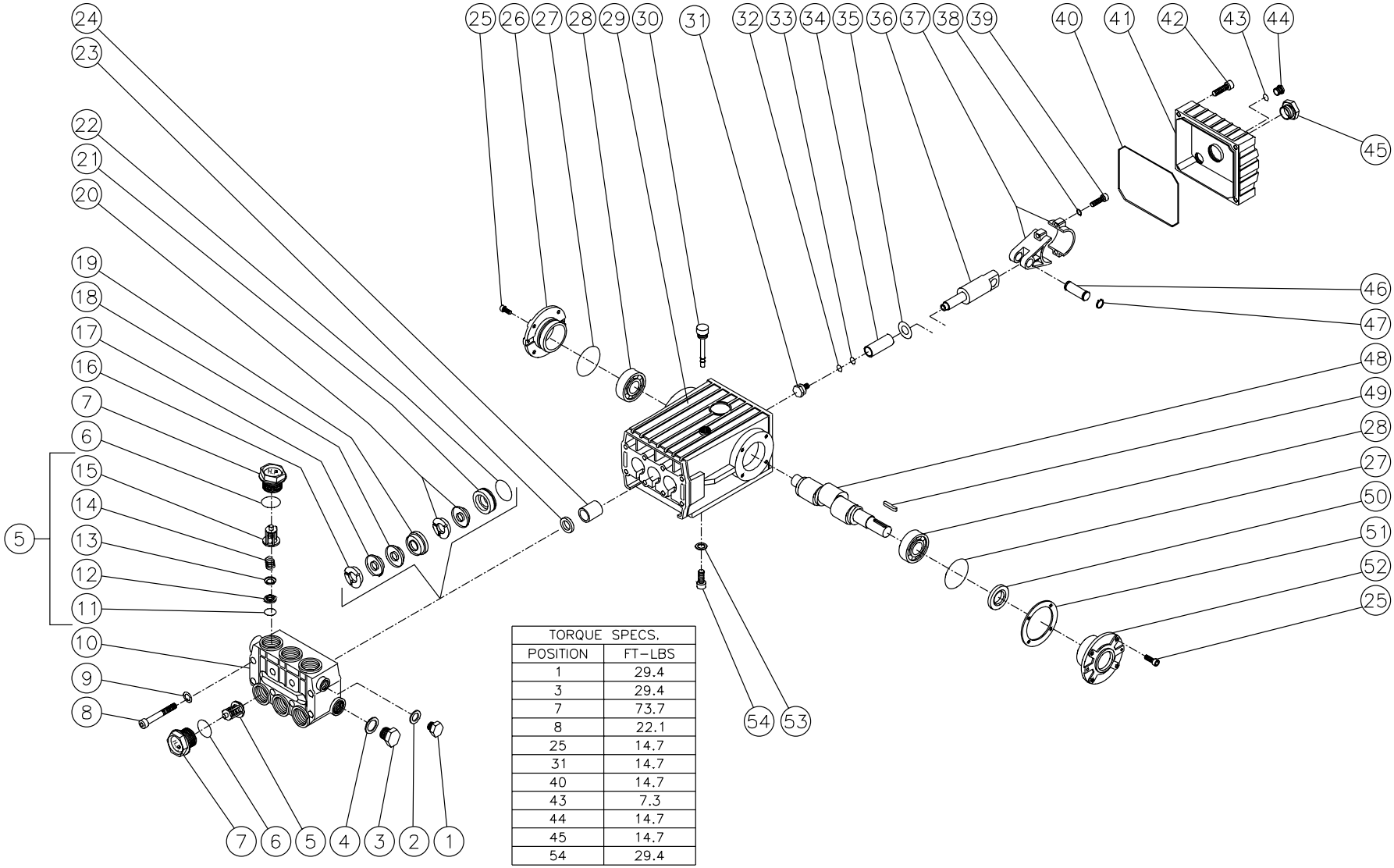

TORQUE SPECS.	
POSITION	FT-LBS
1	29.4
3	29.4
7	73.7
8	22.1
25	14.7
31	14.7
40	14.7
43	7.3
44	14.7
45	14.7
54	29.4

3-0075-102899-RD

©Copyright 2002, Mi-T-M Corporation®

PUMP ASSEMBLY (3-0075)

REF. #	DESCRIPTION	PART #	QTY.	REF. #	DESCRIPTION	PART #	QTY.	REF. #	DESCRIPTION	PART #	QTY.
1	Plug	39-0018	1	21	Low Pressure Seal Retainer	46-0286	3	41	Crankcase Cover	46-0295	1
2	Washer	28-1002	1	22	O-ring	25-0015	3	42	Bolt	27-8404	5
3	Plug	39-0019	1	23	Oil Seal	26-0047	3	43	O-ring	25-0014	1
4	Washer	28-1038	1	24	Bushing	9-0029	3	44	Plug	39-0017	1
5	Valve Assembly (Inc. 11-15) (See 70-0009)	N/A Sep.	6	25	Bolt	27-8431	8	45	Oil Level Indicator	46-0114	1
6	O-ring	25-0012	6	26	Crankcase Cover	46-0336	1	46	Connecting Rod Pin	43-0032	3
7	Valve Plug	46-0282	6	27	O-ring	25-0013	2	47	Retaining Ring	46-0103	6
8	Bolt	27-8185	8	28	Bearing	48-0012	2	48	Crankshaft	46-0050	1
9	Flatwasher	28-1039	8	29	Crankcase	46-0292	1	49	Key	43-0048	1
10	Manifold	46-0291	1	30	Oil Dip Stick	46-0144	1	50	Oil Seal	26-0049	1
11	O-ring (See 70-0009)	N/A Sep.	6	31	Bolt	46-0285	3	51	Shim	46-0113	1
12	Valve Seat (See 70-0009)	N/A Sep.	6	32	O-ring	25-0138	3	52	Crankcase Open Cover	46-0296	1
13	Valve Plate (See 70-0009)	N/A Sep.	6	33	Back-up Ring	25-0137	3	53	Lockwasher	29-0055	4
14	Valve Spring (See 70-0009)	N/A Sep.	6	34	Plunger	46-0337	3	54	Bolt	27-8471	4
15	Valve Cage (See 70-0009)	N/A Sep.	6	35	Washer	46-0283	3		Valve Assembly (6 each 5, 11-15)	70-0009	
16	High Pressure Head Ring (See 70-0031)	N/A Sep.	3	36	Piston Rod	46-0294	3		Head Ring Kit (3 each 16)	70-0031	
17	High Pressure V-Packing(See 70-0042)	N/A Sep.	3	37	Connecting Rod	46-0051	3		V-Packing Kit (3 each 17, 18, 20)	70-0042	
18	V-Packing Support (See 70-0042)	N/A Sep.	3	38	Lockwasher	29-0154	6		V-Packing Assembly (3 each 16-20, 22)	852-0064	
19	High Pressure Intermediate Seal Retainer	46-0289	3	39	Bolt	27-8435	6				
20	Low Pressure Seal (See 70-0042)	N/A Sep.	3	40	O-ring Cover	25-0339	1				

©Copyright 2002, Mi-T-M Corporation®

UNLOADER ASSEMBLY (8-0270)

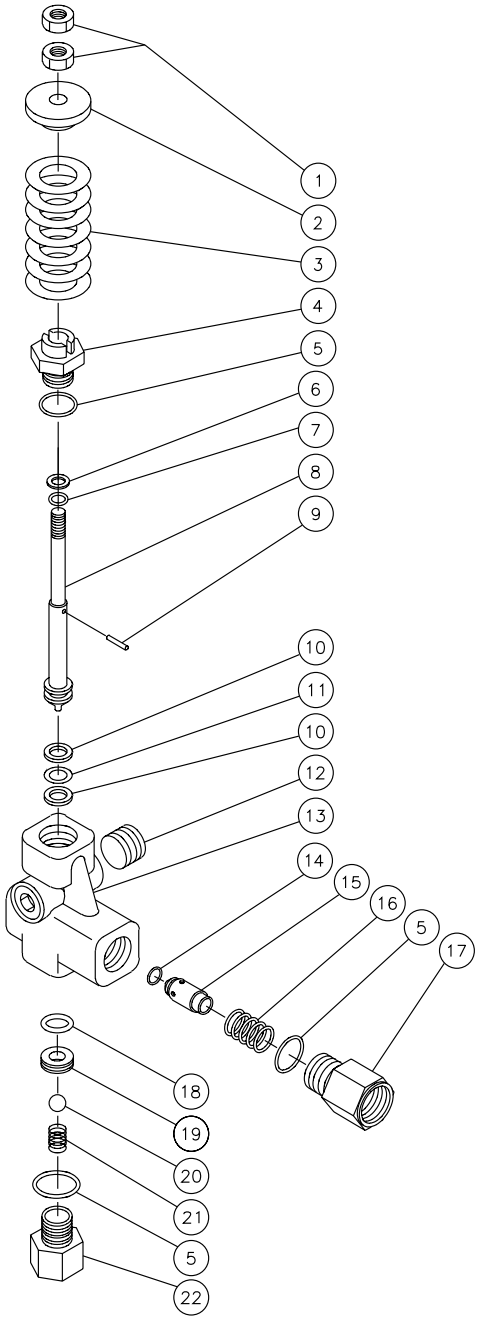

OMGEN043-083094-BAR

©Copyright 2002, Mi-T-M Corporation®

UNLOADER ASSEMBLY (8-0270)			
REF. #	**DESCRIPTION**	**PART #**	**QTY.**
1	Hex Nut	30-7203	2
2	Spring Guide	8-0278	1
3	Spring	49-0111	1
4	Piston Housing	8-0279	1
5	O-ring	25-0189	3
6	Back-up Ring	8-0277	1
7	O-ring	25-0192	1
8	Piston	8-0280	1
9	Pin	43-0059	1
10	Back-up Ring	8-0276	2
11	O-ring	25-0191	1
12	Plug	39-0055	2
13	Valve Housing	8-0275	1
14	O-ring	25-0193	1
15	Check Valve	22-0127	1
16	Spring	49-0058	1
17	Outlet Connection	8-0271	1
18	O-ring	25-0190	1
19	Seat	8-0272	1
20	Ball	8-0273	1
21	Spring	49-0059	1
22	Inlet Connection	8-0274	1
	Unloader Kit (5-7, 10, 11, 14, 18-20)	70-0107	1

©Copyright 2002, Mi-T-M Corporation®

GUN ASSEMBLY (16-0001)

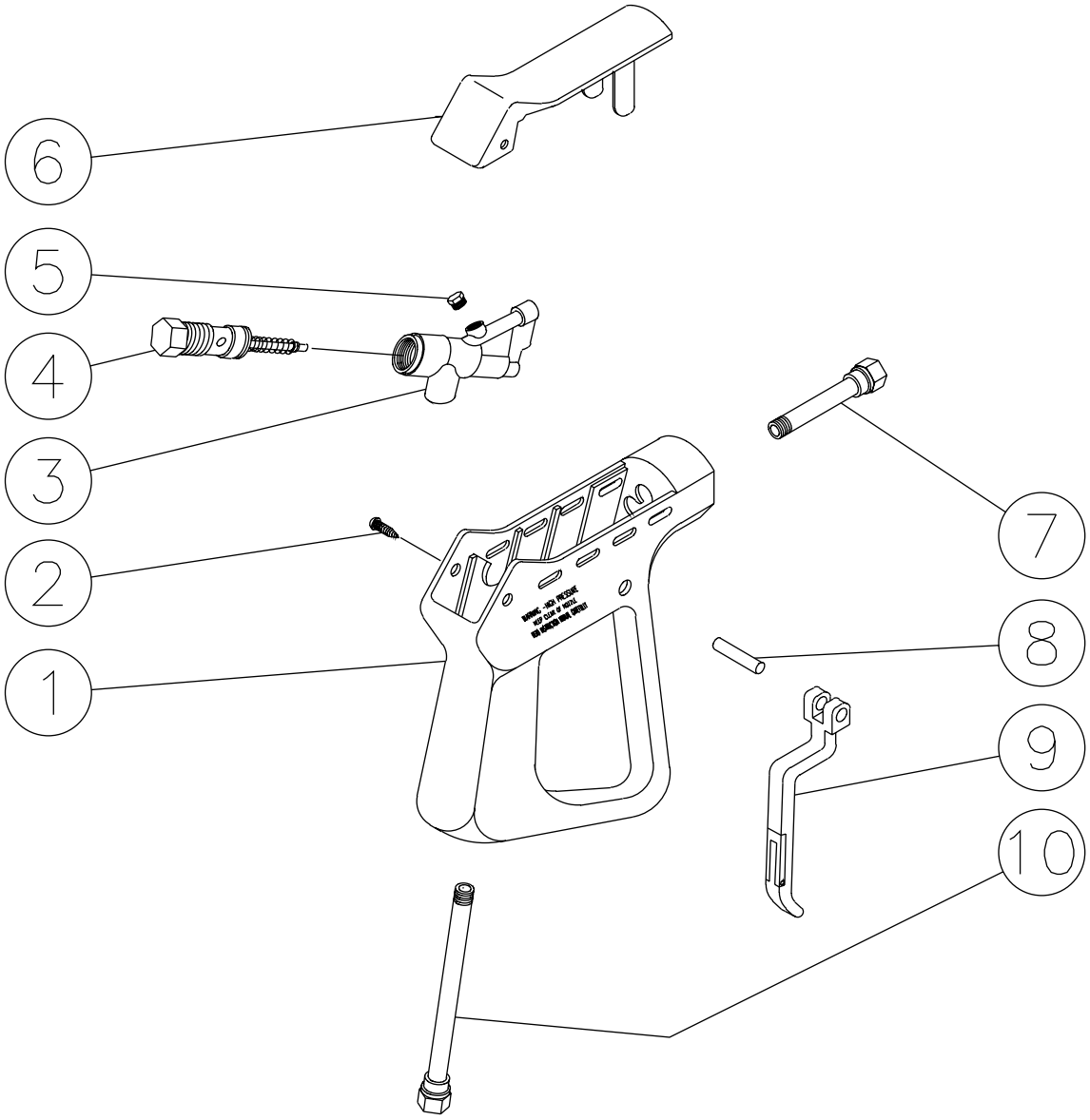

16-0001-110399-RD

©Copyright 2002, Mi-T-M Corporation®

16-0001-110399-RD

GUN ASSEMBLY (16-0001)			
REF. #	**DESCRIPTION**	**PART #**	**QTY.**
1	Plastic Housing	16-0008	1
2	Screw	27-3230	2
3	Brass Housing	16-0012	1
4	Gun Repair Kit	70-0055	1
5	Brass Plug	39-0024	1
6	Plastic Cover	16-0009	1
7	Pipe Assembly	16-0013	1
8	Trigger Pin	16-0063	1
9	Trigger/Safety Lock-off	16-0010	1
10	Pipe Assembly- Inlet	16-0016	1
	Complete Gun Assembly	16-0001	1

©Copyright 2002, Mi-T-M Corporation®

©Copyright 2002, Mi-T-M Corporation®