Mi-T-M® CORPORATION

8650 Enterprise Drive, Peosta IA 52068
319-556-7484 / Fax 319-556-1235

PARTS LIST FOR

CV-2000-1MBC

ENGINE OIL GRADE:	**ABOVE 40°F=SAE30/ BELOW 40°F=SAE10W-30**
ENGINE OIL CAPACITY:	**20 oz.**
PUMP OIL GRADE:	**MI-T-M PUMP OIL #AW-4085-0016**
PUMP OIL CAPACITY (SEALED):	**4.5 oz.**
PRESSURE NOZZLE SIZE:	**1.20**

©Copyright 2000, Mi-T-M Corporation

EX-9077-070500
Issue Date: 012398

This Parts Listing has been compiled for your benefit. You can be assured your Mi-T-M Cold Water Pressure Washer was constructed and designed with quality and performance in mind using over 25 years experience in the pressure washer business. Each component has been rigorously tested to insure the highest level of acceptance.

The contents of this Parts Listing are based on the latest product information available at the time of publication. Mi-T-M reserves the right to make changes in price, color, materials, equipment, specifications or models at any time without notice.

WARNING

THIS IS A PROFESSIONAL HIGH PRESSURE, COLD WATER PRESSURE WASHER. CAUTION SHOULD BE OBSERVED WHEN USING OR REPAIRING THIS UNIT! READ AND FOLLOW THE SAFETY WARNINGS LISTED BELOW BEFORE ATTEMPTING ANY REPAIRS ON THIS PRESSURE WASHER!

SAFETY WARNINGS

1. NEVER alter or modify the equipment. Be sure any accessory items and system components being used will withstand the pressure developed. Use only genuine Mi-T-M parts for repair of your pressure washer. Failure to do so can cause hazardous operating conditions and will VOID warranty.

2. NEVER make adjustments on machinery while the unit is connected to the engine without first removing the ignition cable from the spark plug. Turning over the machinery by hand during adjustment or cleaning might start the engine and machinery with it, causing serious injury to the operator.

3. Know how to stop and bleed pressures quickly. Be thoroughly familiar with controls.

4. Before servicing the unit, turn unit off, relieve the water pressure and allow the unit to cool down. Do not make repairs while the unit is running. Service in a clean, dry, flat area. Block the wheels to prevent the unit from moving. Be especially careful to properly dispose of any flammable materials.

5. After testing the machine, DO NOT leave the pressurized unit unattended. Shut off the unit and release trapped pressure before leaving.

Table of Contents

SPECIFICATIONS **3**
FRAME ASSEMBLY FOR CV-2000-1MBC **4**
PUMP ASSEMBLY (3-0152) **6**
GUN (16-0337) & LANCE (16-0338) ASSEMBLY **8**
NOTES **10**

©Copyright 2000, Mi-T-M Corporation

EX-9077-070500R0
Issue Date: 012398

SPECIFICATIONS

CV-2000-1MBC

MODEL NUMBER	CV-2000-1MBC
Operating Pressure (PSI/Bar):	2000/137.8
High Pressure Nozzle:	1.20 mm
Water Volume (GPM/lpm):	2.0/7.6
Engine:	Briggs & Stratton
Horsepower	5.0
Engine Type	4 Stroke, Overhead Valve, Single Cylinder
Oil Type	Above 40 F=SAE30/Below 40 F=SAE10W-30
Oil Capacity (oz./liters)	20/.6
Fuel Type	Unleaded Gasoline 86 Octane Minimum
Fuel Capacity (gallon/ liters)	.38/1.42
Starting	Recoil
Maximum No Load RPM	3600 (+/- 100) RPM
Pump:	Direct Driven, Oil Bath, Triplex Axial Piston
Oil Type	Mi-T-M Pump Oil #AW-4085-0016
Oil Capacity (oz./liters)	4.5/.13
Plungers	Stainless Steel
Manifold	Aluminum
Valves	Stainless Steel
Unloader	Preset
Detergent Injector	Low pressure down stream from pump
Unit Net Weight (lbs/Kg)	57/26
Unit Shipping Weight (lbs/Kg)	72/33
Unit Net Dimension (cm)	19.5Lx14.5Wx19.5H/ 49.5Lx37Wx49.5H
Unit Shipping Dimension (cm)	23.5Lx14.5Wx22H/ 60Lx37Wx56.5H

©Copyright 2000, Mi-T-M Corporation

EX-9077-070500
Issue Date: 012398

FRAME ASSEMBLY FOR CV-2000-1MBC

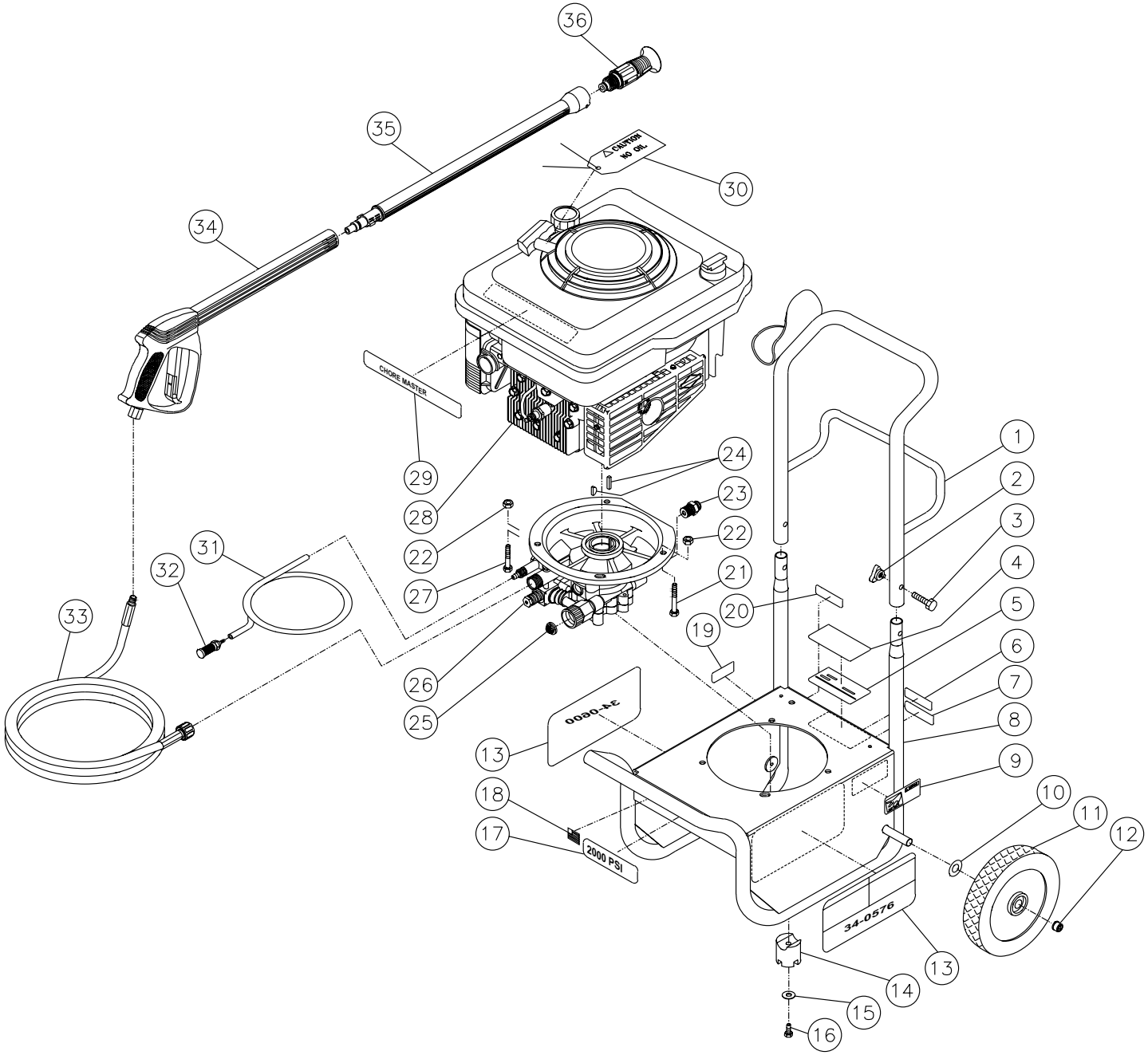

CV-2000-1MBC-011700-RD

©Copyright 2000, Mi-T-M Corporation

EX-9077-070500R0
Issue Date: 012398

FRAME ASSEMBLY FOR CV-2000-1MBC							
REF. #	**DESCRIPTION**	**PART #**	**QTY.**	**REF. #**	**DESCRIPTION**	**PART #**	**QTY.**
1	Handle	7-0116A01	1	20	Decal- Technical Service Number	34-0603	1
2	Knob	7-0115	2	21	Bolt	27-0074	1
3	Bolt	27-0017	2	22	Locknut	30-0157	3
4	Decal- Clear Laminate	N/A	1	23	Heat Dump Valve	22-0114	1
5	Decal- Silver Sticker I.D.	N/A	1	24	Key-Woodruff	43-0081	1
6	Decal- Cold Water Serial Number	N/A	1	-	Key-Square	43-0085	1
7	Decal- Vertical Patent	N/A	1	25	Filter	19-0001	1
8	Frame Assembly	5-0116A01	1	26	Pump	3-0152	1
9	Decal- Warning: Muffler Hot E/S	34-0598	1	27	Bolt	27-0070	2
10	Washer	28-0006	5	28	Engine	1-0100	1
11	Wheel	14-0051	2	29	Decal- Chore Master	34-0590	1
12	Hub Cap	33-0055	2	30	Tag- Shipped Without Oil	34-0732	1
13	Decal- Warn/Caution/Oper. (English only)	34-0576	1	31	Detergent Hose *(Four Feet Required)	15-0021	1
-	Decal- Warn/Caution/Oper. (Spanish only)	34-0600	1	32	Detergent Strainer	19-0050	1
14	Isolator	14-0063	2	33	Pressure Hose	15-0167	1
15	Washer	28-0021	2	34	Gun Assembly	16-0337	1
16	Screw	27-3096	2	35	Lance Assembly	16-0338	1
17	Decal-Die Cut: 2000 PSI	34-0592	1	36	Variable Nozzle Assembly	18-0312	1
18	Decal-American Flag	34-0521	1	*Must Order in One Foot Lengths			
19	Decal-Caution: Allow to Cool E/S	34-0599	1				

©Copyright 2000, Mi-T-M Corporation

PUMP ASSEMBLY (3-0152)

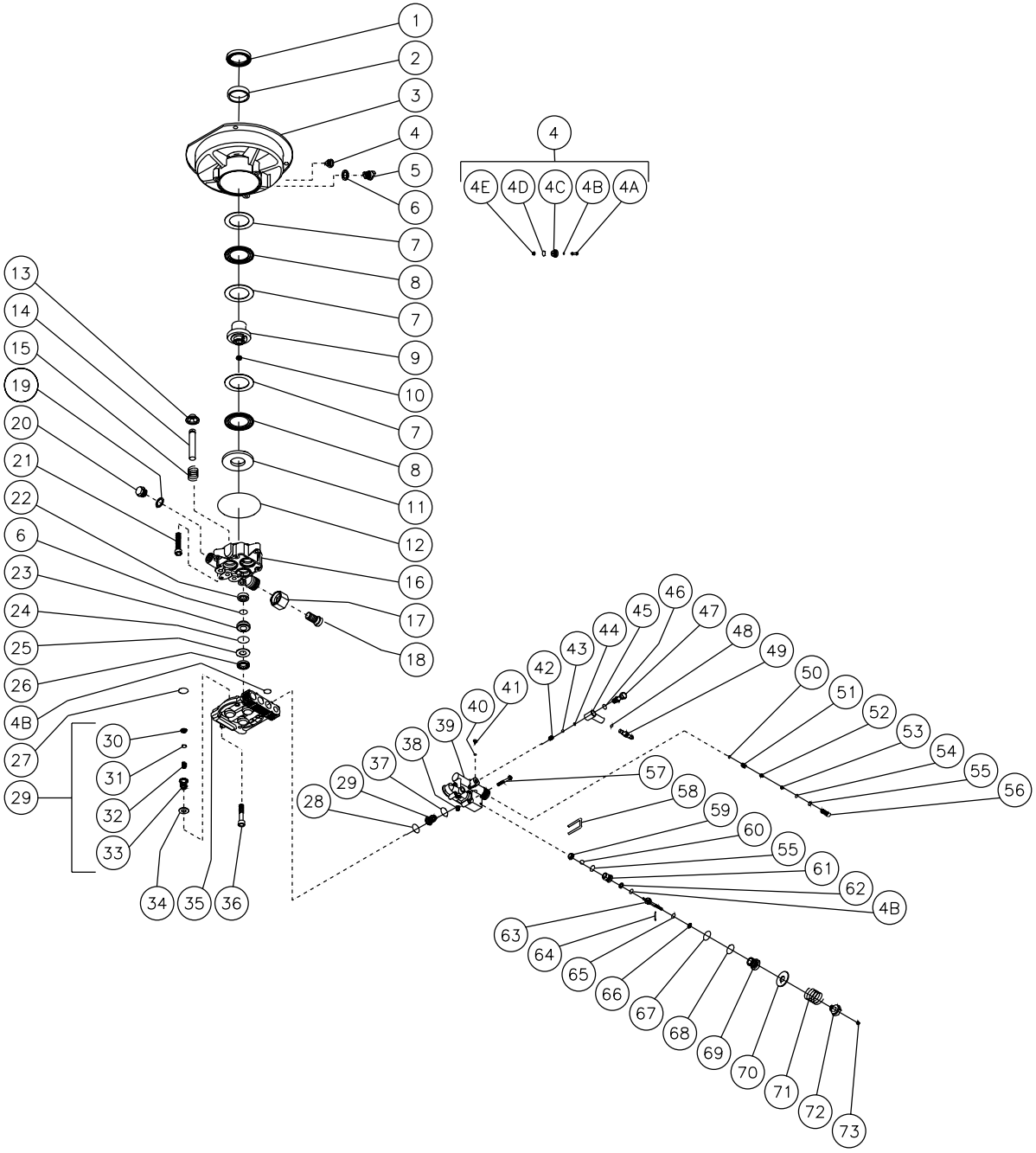

3-0152-050400-RD

©Copyright 2000, Mi-T-M Corporation

EX-9077-070500R0
Issue Date: 012398

PUMP ASSEMBLY (3-0152)

REF #	DESCRIPTION	PART #	QTY
1	Oil Seal (See 70-0189)	N/A Sep.	1
2	Bushing (See 70-0189)	N/A Sep.	1
3	Flange (See 70-0189)	N/A Sep.	1
4	Oil Vent Assembly (4A-4E)	22-0223	1
4A	Oil Vent (See 22-0223)	N/A Sep.	1
4B	O-ring	25-0230	3
4C	Oil Vent (See 22-0223)	N/A Sep.	1
4D	O-ring (See 22-0223)	N/A Sep.	1
4E	Oil Vent-Spring (See 22-0223)	N/A Sep.	1
5	Oil Sight Glass- Plastic	46-0735	1
6	O-ring	25-0255	4
7	Thrust Washer	48-0056	3
8	Thrust Needle Roller Bearing	48-0057	2
9	Wobble Plate - 8.5	46-0742	1
10	Plug	39-0082	1
11	Thrust Washer	48-0064	1
12	O-ring	25-0358	1
13	Retainer	46-0663	3
14	Piston-Stainless Steel	46-0664	3
15	Spring	49-0129	3
16	Pump Housing w/Heat Dump Port	46-0746	1
17	Garden Hose Connection	23-0304	1
18	Garden Hose Adapter	23-0305	1
19	Gasket	26-0168	1
20	Plug	39-0098	1
21	Bolt	27-8404	3
22	Oil Seal	26-0195	3
23	Retainer	46-0737	3
24	O-ring (See 70-0195)	25-0399	3
25	Back-up Ring	25-0422	3
26	Pressure Seal	46-0744	3
27	O-ring	25-0359	3
28	O-ring	25-0360	3
29	Valve Complete (Inc. 30-33) (See 70-0191)	N/A Sep.	6
30	Valve Seat (See 70-0191)	N/A Sep.	6
31	Valve Plate (See 70-0191)	N/A Sep.	6
32	Valve Spring (See 70-0191)	N/A Sep.	6
33	Valve Cage-Plastic (See 70-0191)	N/A Sep.	6
34	Shim	46-0745	3
35	Pump Head	46-0658	1
36	Bolt	27-8892	5
37	O-ring	25-0361	4
38	Plug	27-8868	1
39	Pump Manifold	46-0740	1
40	O-ring	25-0357	1
41	Bolt	27-8894	1
42	Detergent Injector Spring (See 70-0102)	N/A Sep.	1
43	Detergent Injector Ball (See 70-0102)	N/A Sep.	1
44	O-ring (See 70-0102)	N/A Sep.	1
45	Detergent Injector Adapter	46-0636	1
46	O-ring (See 70-0102)	N/A Sep.	1
47	Banjo Fitting	46-0637	1
48	O-ring	25-0341	1
49	Hose Barb - Detergent Injector	46-0638	1
50	O-ring	25-0334	1
51	Check Valve	22-0158	1
52	Spring - Check Valve	49-0130	1
53	Injector Nozzle	46-0356	1
54	O-ring	25-0362	1
55	O-ring	25-0248	2
56	Injector Body	46-0360	1
57	Bolt	27-8893	4
58	U-Clip	46-0741	1
59	Valve Seat Plate	46-0686	1
60	Ball	46-0685	1
61	Unloader Seat	46-0352	1
62	Backup Ring	25-0247	1
63	Piston Bypass Valve (See 70-0193)	N/A Sep.	1
64	Roll Pin	46-0364	1
65	O-ring	25-0242	1
66	Backup Ring	25-0246	1
67	O-ring	25-0231	1
68	O-ring	25-0263	1
69	Body Bypass Valve	8-0470	1
70	Washer	28-0295	1
71	Pressure Regulating Spring - 2000 PSI	49-0131	1
72	Pressure Regulating Nut	8-0471	1
73	Set Screw	27-8895	1
	Flange Assembly (Includes 1-3)	70-0189	
	Piston Assembly (Includes 13-14)	70-0190	
	Valve Kit (Includes 27-29)	70-0191	
	Injector Repair Kit (Inc. 42-44, 46)	70-0102	
	Unloader Check Valve Kit (Inc. 50-56)	70-0108	
	Unloader Seat Kit (Includes 55, 59-61)	70-0192	
	Unloader Stem Kit (Inc. 4B, 62-73)	70-0193	
	Manifold Assy. (Inc. 4B, 38-47, 50-73)	70-0194	

©Copyright 2000, Mi-T-M Corporation

GUN (16-0337) & LANCE (16-0338) ASSEMBLY

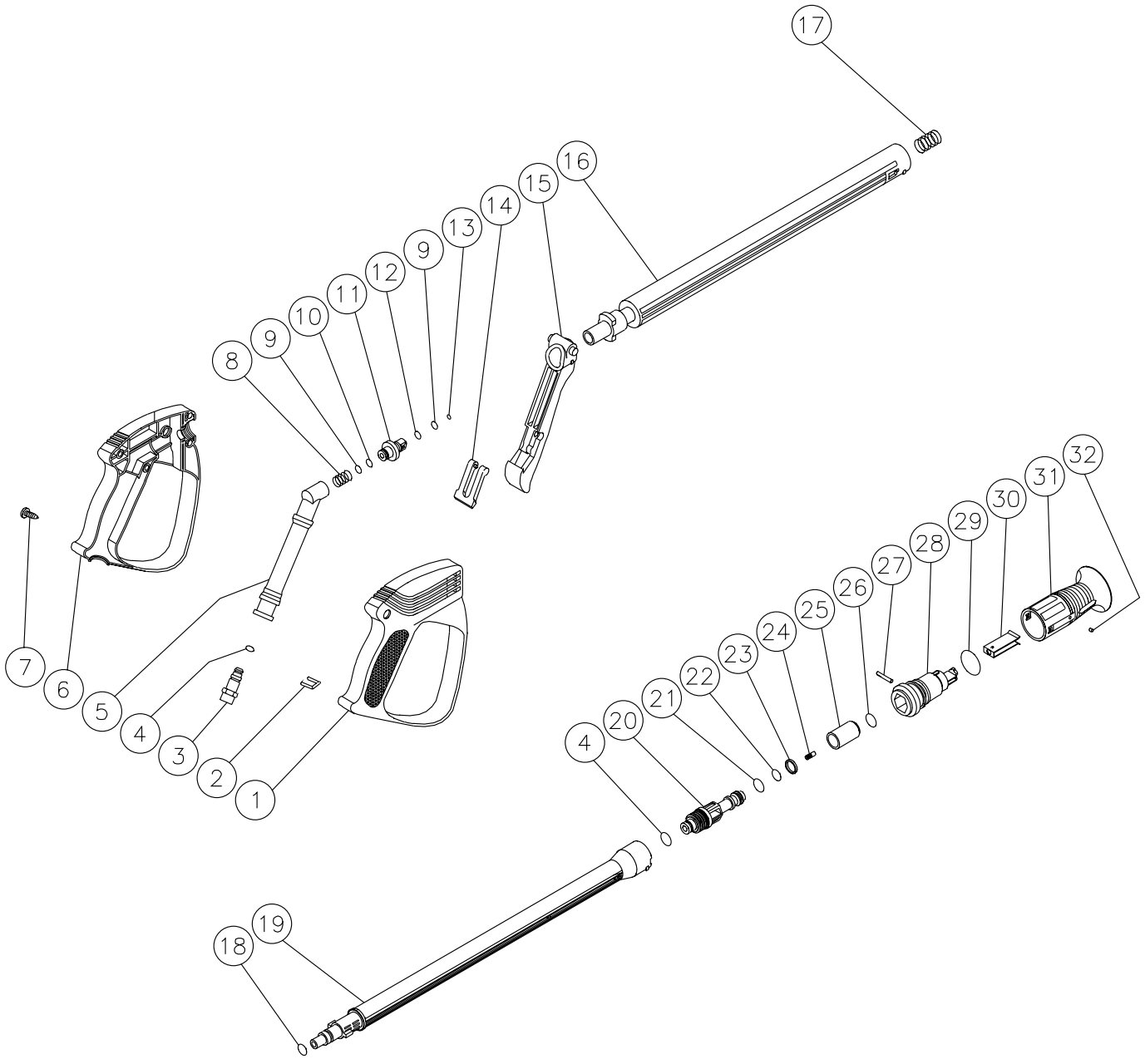

OMGEN234A-031097-JTR

©Copyright 2000, Mi-T-M Corporation

EX-9077-070500R0
Issue Date: 012398

GUN (16-0337) & WAND (16-0338) ASSEMBLY								
REF. #	**DESCRIPTION**	**PART #**	**QTY.**		**REF. #**	**DESCRIPTION**	**PART #**	**QTY.**
1	Plastic Housing-Right Side	62-0101	1		19	Lance (See 16-0338)	N/A Sep.	1
2	U-Clip	16-0340	1		20	Nozzle Body	18-0315	1
3	Inlet Adaptor	23-0303	1		21	O-ring	25-0345	1
4	O-ring	25-0364	2		22	O-ring	25-0343	1
5	Inlet Tube	16-0339	1		23	Back-up Ring	25-0344	1
6	Plastic Housing- Left Side	62-0102	1		24	Nozzle- 1.20mm	18-0237	1
7	Screw	27-8382	6		25	Sleeve (See 18-0312)	N/A Sep.	1
8	Spring	49-0117	1		26	O-ring	25-0419	1
9	O-ring	25-0415	2		27	Pin	43-0083	1
10	Back-up Ring	25-0416	1		28	Housing (See 18-0312)	N/A Sep.	1
11	Valve (See-70-0188)	N/A Sep.	1		29	O-ring	25-0342	1
12	Back-up Ring	25-0417	1		30	Nozzle Angle Plate	18-0283	1
13	O-ring	25-0253	1		31	Nozzle Protector	18-0320	1
14	Trigger Safety Lock	62-0097	1		32	Identification Pin- 1.20mm (Yellow)	18-0286	1
15	Trigger	62-0098	1			Gun Assembly (Includes 1-17)	16-0337	
16	Wand	16-0341	1			Lance Assembly w/Bayonet (Inc. 18-19)	16-0338	
17	Spring	49-0128	1			Nozzle Assembly 1.20mm (Inc. 4, 20-32)	18-0312	
18	O-ring	25-0418	1			Gun Repair Kit (Inc. 8-13)	70-0188	

©Copyright 2000, Mi-T-M Corporation

NOTES

©Copyright 2000, Mi-T-M Corporation

EX-9077-070500R0
Issue Date: 012398

NOTES

©Copyright 2000, Mi-T-M Corporation

EX-9077-070500
Issue Date: 012398

©Copyright 2000, Mi-T-M Corporation