

Model Numbers:
See table below

WARRANTY
1 YEAR

APPLICATIONS

Ideal for vineyards, dairy washdown, chiller water pumping, hot water washing, treated water transfer and small industrial applications.

DAVEY
CS Series

STAINLESS STEEL DIN PUMPS

FEATURES & BENEFITS

- **Pressed 316 stainless steel construction** is ideal for clean water applications
- **Improved efficiency using Davey's patented floating neck ring**, a 360° flaring of the volute and excellent impeller design
- **Davey CS pumps come standard with a high temperature mechanical seal** and can hand liquid temperatures from -15°C to +110°C run design
- **They come with DIN (EN733) companion flanges** and are mounted on a 316 stainless steel base for excellent corrosion resistance
- **Consisting of a back pull-out design** which allows the rotating element of pump to be removed for servicing without the need to disconnect the pipework
- **Feature a replaceable stub shaft motor** for easy repairs of the wet end components and easy motor replacement

Model Numbers	Variants			
	Power (kW)	Phase Options		Material (316 SS)
CS32-125	1.1	1	N/A	S
CS32-160	1.5	1	3	S
CS32-160	2.2	1	3	S
CS32-200	3	N/A	3	S
CS32-200	4		3	S
CS40-125	1.5		3	S
CS40-125	2.2		3	S
CS40-160	3		3	S
CS40-160	4		3	S
CS40-200	5.5		3	S
CS40-200	7.5		3	S
CS50-125	3		3	S
CS50-125	4		3	S
CS50-160	5.5		3	S
CS50-160	7.5		3	S
CS50-200	9.2		3	S
CS50-200	11		3	S

End Suction Pumps

DAVEY

MATERIALS OF CONSTRUCTION	
PART	MATERIAL
Casing	316 Stainless Steel
Impeller	316 Stainless Steel
Key	316 Stainless Steel
Impeller nut	316 Stainless Steel
Mechanical seal	Carbon/Silicon Carbide/EPDM
Back cover	316 Stainless Steel
Bell housing	Cast Iron

OPERATING LIMITS	
Maximum Heads	58 metres
Maximum Flow	1300 lpm (78 m^3/hr)
Maximum Operating Pressure	10 bar (1000 kPa)
Fluid Temperature	-20°C to +110°C
Ambient Temperature	-15°C to +40°C

IDENTIFICATION OF THE PUMP

CS32-125 / 1.1 / 3 / S

- 316 Stainless Steel
- 3 phase (blank = 1Ø)
- Motor Power
- Nominal Impeller Diameter
- Outlet Size
- CS Series 316 Stainless Steel Pump

MOTOR TECHNICAL SPECIFICATIONS - 1 Ø (50Hz)								
Motor 1 Ø	Frame	IP Rating	FLC 240V (Amps)	Locked Rotor Current (A)	RPM	Efficiency %	Bearings	
							Drive End	Non-Drive End
1.1	80 B35	55	6.1	35.3	2834	75.3	6204-ZZ	6204-ZZ
1.5	90 B35	55	7.9	43.3	2850	79.3	6205-ZZ	6205-ZZ
2.2	90 B35	55	11.27	61.8	2870	81.6	6205-ZZ	6205-ZZ

MOTOR TECHNICAL SPECIFICATIONS - 3 Ø (50Hz)								
Motor 3 Ø	Frame	IP Rating	FLC 415V (Amps)	Locked Rotor Current (A)	RPM	Efficiency %	Bearings	
							Drive End	Non-Drive End
1.5	90 B35	55	3.18	23	2854	83.2	6205-ZZC3	6205-ZZC3
2.2	90 B35	55	4.39	28.5	2856	85.4	6205-ZZC3	6205-ZZC3
3	100 B35	55	5.69	39.9	2880	87.2	6206-ZZC3	6206-ZZC3
4	112 B35	55	7.1	49	2903	90.6	6306-S	6306-S
5.5	132 B35	55	9.85	68	2919	90.3	7308B	6308ZZC3
7.5	132 B35	55	12.9	91	2928	91.5	7308B	6308ZZC3
9.2	132 B35	55	15.55	131	2943	91.5	7308B	6308ZZC3
11	160 B35	55	19.3	135	2938	90.2	7309B	6309ZZC3

HYDRAULIC PERFORMANCE - CS32

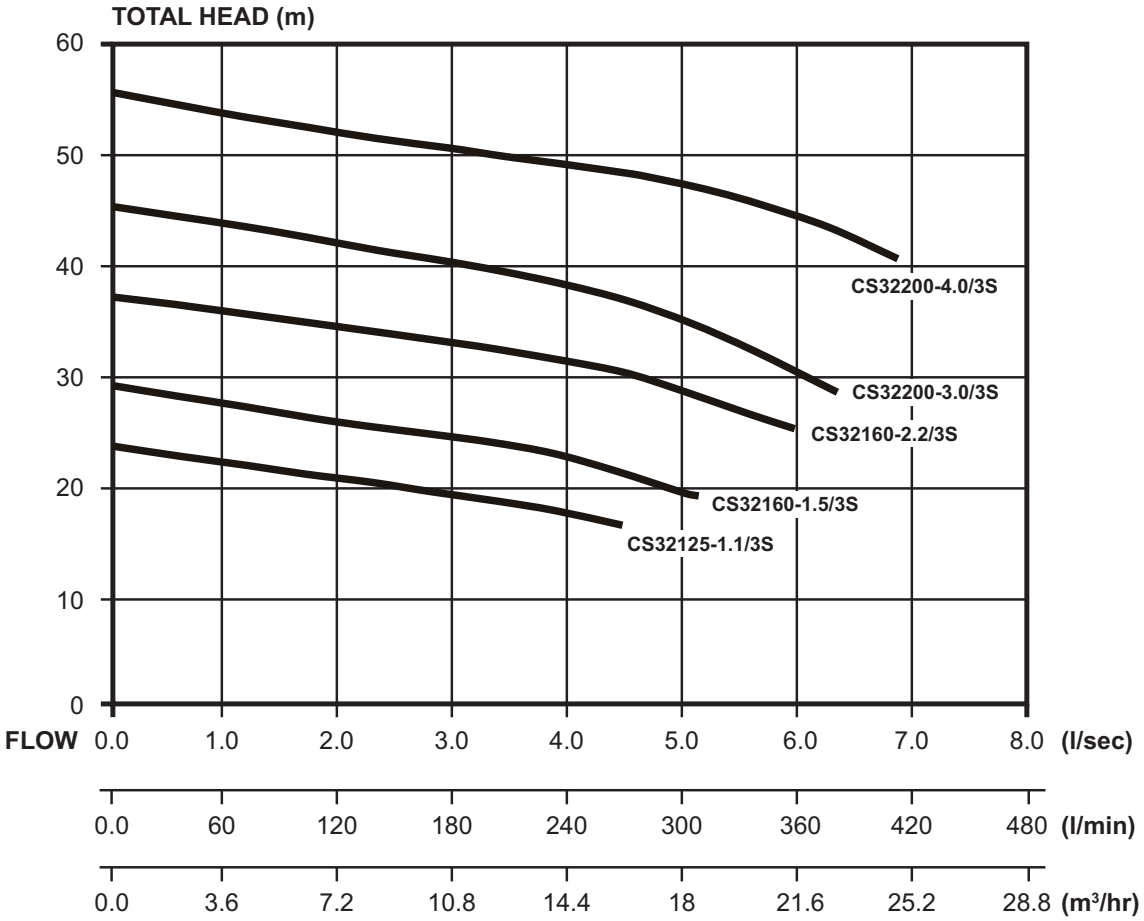

EFFICIENCY AT BEP		
Model	Flow l/sec	Pump Efficiency
CS32-125/1.1S	3.9	63.9%
CS32-160/1.5S	5.2	66.7%
CS32-160/2.2S	5	67.2%
CS32-200/3.0S	5	60.1%
CS32-200/4.0S	6.2	61.6%

NPSHr		
Model	Flow l/sec	NPSHr
CS32-125/1.1S	3.3	1.9
	5.0	2.5
CS32-160/1.5S	3.3	2.0
	5.0	2.3
CS32-160/2.2S	2.2	1.5
	3.3	1.6
	5.0	2.1
CS32-200/3.0S	2.2	1.5
	3.3	1.8
	5.8	2.9
CS32-200/4.0S	2.2	1.6
	3.3	1.7
CS32-200/4.0S	5.8	2.4

HYDRAULIC PERFORMANCE - CS32

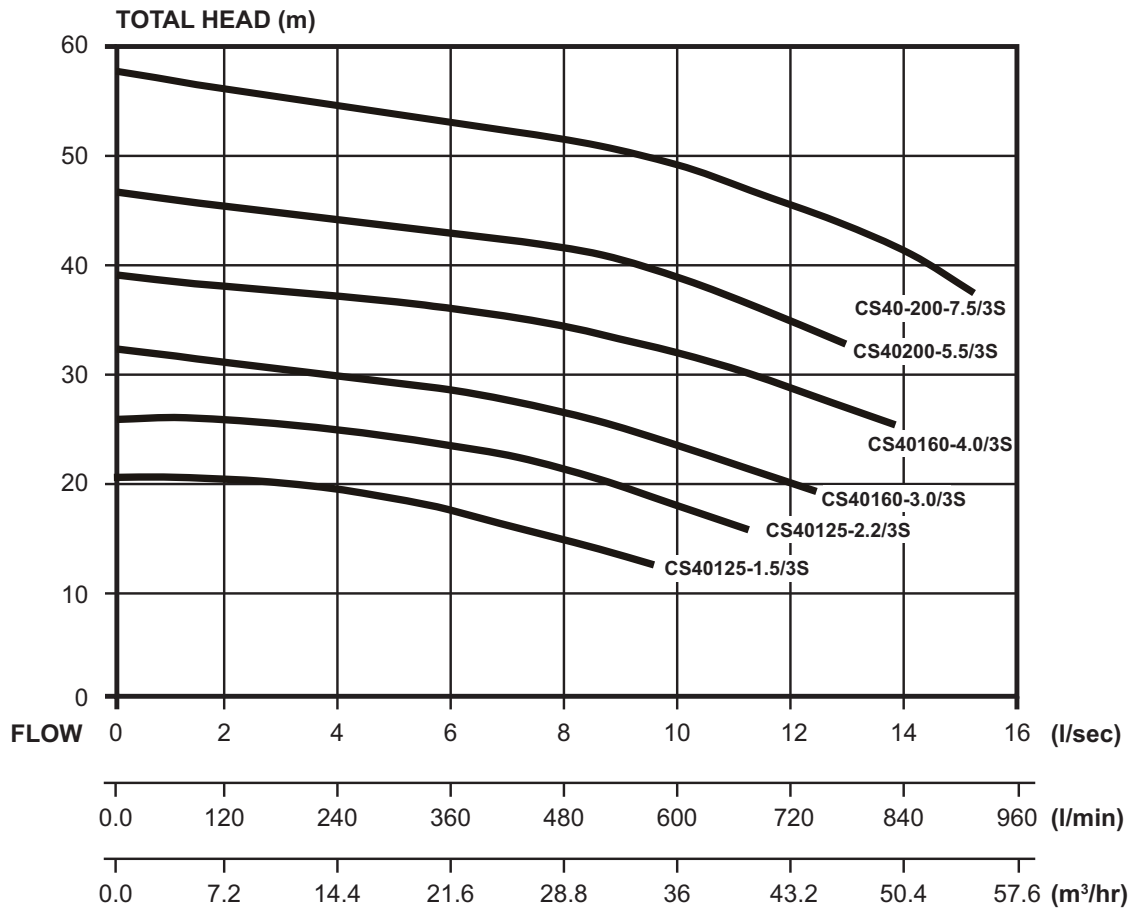

EFFICIENCY AT BEP		
Model	Flow l/sec	Pump Efficiency
CS40-125/1.5S	7.7	73.5%
CS40-125/2.2S	8.5	77.0%
CS40-160/3.0S	9.7	77.0%
CS40-160/4.0S	9.9	73.8%
CS40-200/5.5S	9.8	68.7%
CS40-200/7.5S	12.6	70.4%

NPSHr		
Model	Flow l/sec	NPSHr
CS40-125/1.5S	5.0	1.8
	6.9	1.9
	9.7	2.6
CS40-125/2.2S	5.0	1.5
	6.9	2.0
	9.7	3.1
CS40-160/3.0S	5.0	1.7
	6.9	1.8
	9.7	3.2
CS40-160/4.0S	5.0	1.6
	6.9	1.8
	9.7	2.7
CS40-200/5.5S	5.0	1.8
	6.9	2.3
	9.7	3.1
CS40-200/7.5S	5.0	1.8
	6.9	2.1
	9.7	3.1

HYDRAULIC PERFORMANCE - CS32

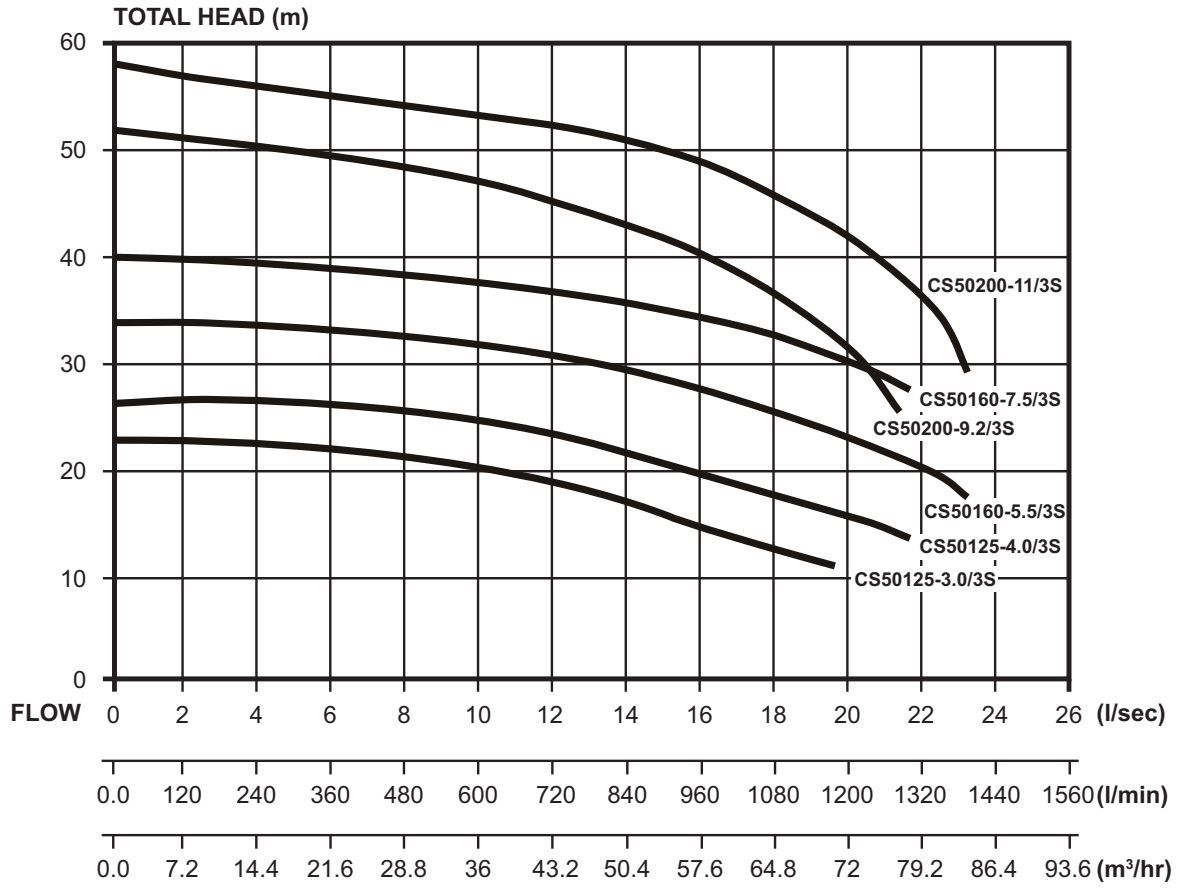

EFFICIENCY AT BEP		
Model	Flow l/sec	Pump Efficiency
CS50-125/3.0S	11.7	73.0%
CS50-125/4.0S	13.4	74.5%
CS50-160/5.5S	15.8	76.6%
CS50-160/7.5S	17.8	76.8%
CS50-200/9.2S	15.6	74.9%
CS50-200/11S	17.8	74.5%

NPSHr		
Model	Flow l/sec	NPSHr
CS50-125/3.0S	8.3	1.8
	13.9	2.9
	16.7	3.4
CS50-125/4.0S	8.3	1.9
	13.9	2.8
	16.7	3.4
CS50-160/5.5S	8.3	2.4
	13.9	2.8
	16.7	4.2
CS50-160/7.5S	8.3	2.2
	13.9	2.9
	16.7	4.0
CS50-200/9.2S	8.3	1.9
	13.9	3.2
	16.7	4.1
CS50-200/11S	8.3	2.0
	13.9	2.9
	16.7	4.0

End Suction Pumps

DAVEY

DIMENSIONS (mm)																						
Model	E	F	h1	h2	h3	L	L1	L2	W	W1	W2	D2	K2	P2	S2	D1	K1	P1	S1	DNA	DNM	Weight (kg)
CS32125-1.1/1S	209	443.5	112	140	252	460	360	50	330	295	250	165	125	99	18	140	100	76	18	50	32	32.5
CS32160-1.5/1S	244	487.5	132	160	280	460	370	50	330	295	250	165	125	99	18	140	100	76	18	50	32	42.5
CS32160-2.2/1S	244	487.5	132	160	280	460	370	50	330	295	250	165	125	99	18	140	100	76	18	50	32	46.5
CS32160-1.5/3S	244	487.5	132	160	254	460	370	50	330	295	250	165	125	99	18	140	100	76	18	50	32	45.5
CS32160-2.2/3S	244	487.5	132	160	254	460	370	50	330	295	250	165	125	99	18	140	100	76	18	50	32	46.5
CS32200-3.0/3S	295	546.5	160	180	287	520	420	50	350	315	270	165	125	99	18	140	100	76	18	50	32	61.5
CS32200-4.0/3S	295	559.5	160	180	309	520	420	50	350	315	270	165	125	99	18	140	100	76	18	50	32	65.5
CS40125-1.5/3S	209	485.5	112	140	234	460	370	50	330	295	250	185	145	118	18	150	110	84	18	65	40	42.3
CS40125-2.2/3S	209	485.5	112	140	234	460	370	50	330	295	250	185	145	118	18	150	110	84	18	65	40	46.3
CS40160-3.0/3S	244	546.5	132	160	259	520	420	50	350	315	270	185	145	118	18	150	110	84	18	65	40	58.3
CS40160-4.0/3S	244	559.5	132	160	281	520	420	50	350	315	270	185	145	118	18	150	110	84	18	65	40	65.3
CS40200-5.5/3S	295	643.5	160	180	327	620	500	60	400	365	320	185	145	118	18	150	110	84	18	65	40	98.3
CS40200-7.5/3S	295	681.5	160	180	327	620	500	60	400	365	320	185	145	118	18	150	110	84	18	65	40	104.3
CS50125-3.0/3S	244	576.5	132	160	259	520	420	50	350	315	270	185	145	118	18	165	125	99	18	65	50	58.5
CS50125-4.0/3S	244	589.5	132	160	281	520	420	50	350	315	270	185	145	118	18	165	125	99	18	65	50	65.3
CS50160-5.5/3S	244	643.5	160	180	327	620	500	60	400	365	320	185	145	118	18	165	125	99	18	65	50	96.5
CS50160-7.5/3S	244	681.5	160	180	327	620	500	60	400	365	320	185	145	118	18	165	125	99	18	65	50	100.5
CS50200-9.2/3S	295	688.5	160	200	327	620	500	60	400	365	320	185	145	118	18	165	125	99	18	65	50	112.5
CS50200-11.0/3S	295	791.5	160	200	412	700	600	50	450	415	370	185	145	118	18	165	125	99	18	65	50	168.5

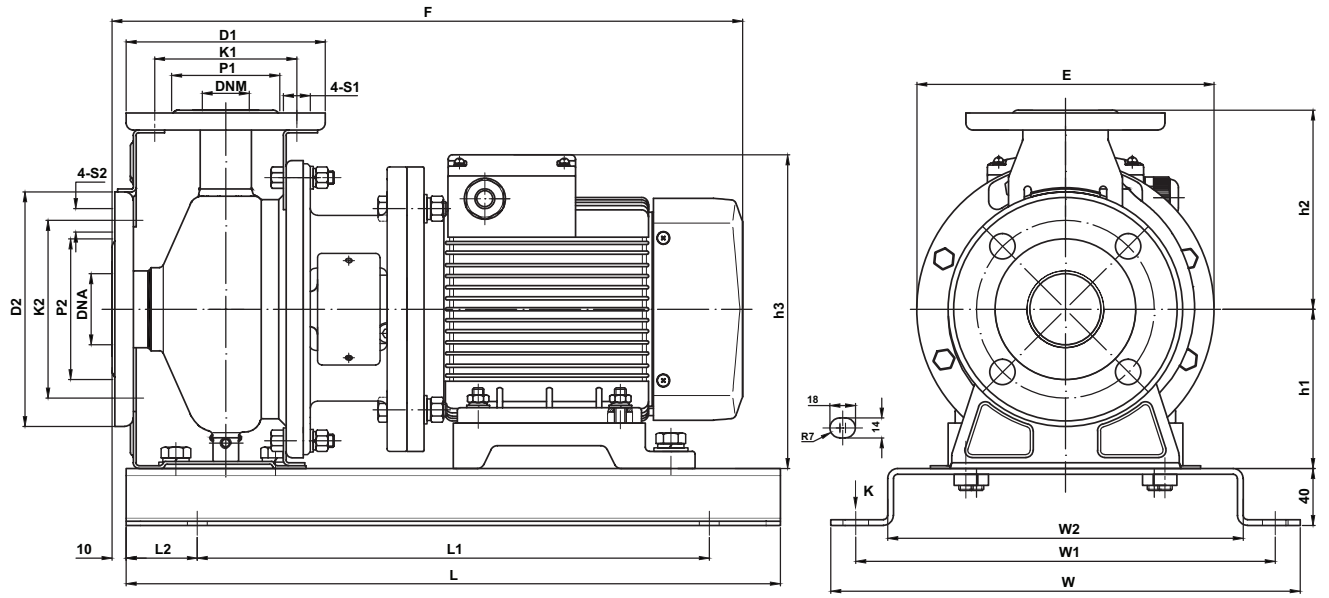

H/O & MFG SCORESBY
Certified System Quality ISO 9001
Certified System Environment ISO 14001

daveywater.com

This literature is not a complete guide to product usage. All images provided in this document are for illustration purposes only. Further information is available from your Davey Dealer, Davey Support Centre and from the relevant product Installation and Operating Instructions. Must be read in conjunction with the relevant product Installation and Operating Instructions and all applicable statutory requirements. Product specifications may change without notice.
® Davey is a registered trademark of Davey Water Products Pty Ltd. © Davey Water Products Pty Ltd 2026.

DAVEY