STAINLESS STEEL

Hydraulic Drive Assemblies

Pump, Hydraulic Motor, Mounting Rails
1450 RPM

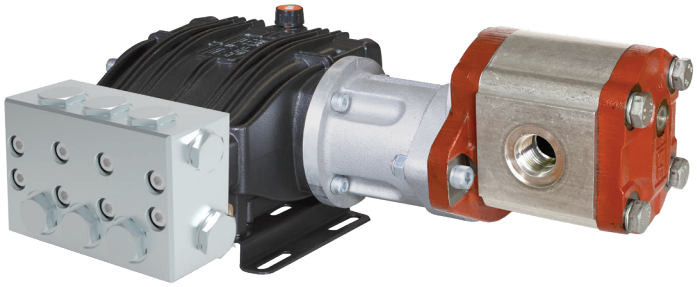

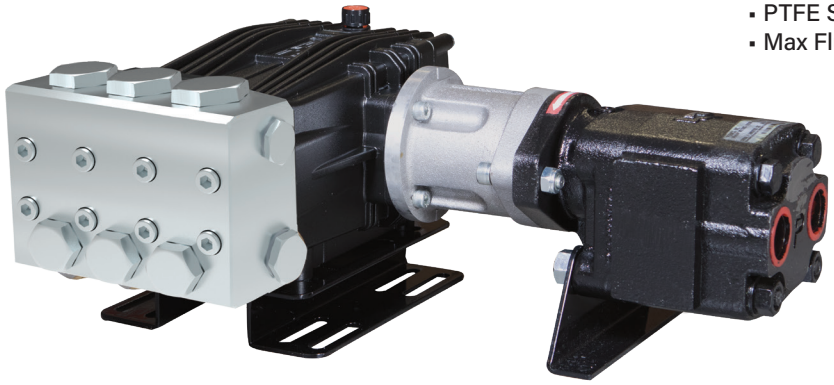

- 316 Stainless Steel Manifolds
- 316 Stainless Steel Valves
- 316 Stainless Steel Plunger Rods & Nuts
- 304 Stainless Steel Exterior Bolts
- Solid Ceramic Plungers
- PTFE Style Packings
- Max Fluid Temp, 160°F

Stainless Steel Hydraulic Drive Assemblies

Stainless steel hydraulic drive plunger pump assemblies include models with flow rates from 4.0 to 5.0 GPM and pressures up to 2900 PSI.

Applications include general pressure cleaning, sewer jetting, vehicle wash equipment and aggressive environment applications.

	Model	GPM	l/min	PSI	bar	Hydraulic Requirements	Weight
1450 RPM	BSC 15/20 SH	4.0	15.0	2900	200	10.0 GPM @ 1700 PSI	39 lbs
	BSC 18/20 SH	4.9	18.5	2900	200	10.0 GPM @ 1900 PSI	39 lbs
	BSC 21/20 SH	5.5	21.0	2900	200	10.0 GPM @ 1900 PSI	39 lbs
	CSC 27/20 SH	7.0	27	3000	200	20.0 GPM @ 2000 PSI	80 lbs
	CSC 34/20 SH	9.0	34	3000	200	20.0 GPM @ 2000 PSI	80 lbs
	CSC 42/17 SH	11.5	42	2500	170	20.0 GPM @ 2200 PSI	80 lbs
	CSC 50/15 SH	13.0	50	2200	150	20.0 GPM @ 2200 PSI	80 lbs

UDOR USA
World Leader in Diaphragm and Plunger Pumps

6180 140th Avenue NW
Ramsey, MN 55303

Ph: 651-785-0666
Fax: 800-732-2670

www.udorusa.com
sales@udorusa.com

Scan this QR Code for More Information

Hydraulic Drive Assembly CSC 34/20 SH

MAX FLOW	9.0 GPM / 34 L/MIN
MAX PRESSURE	3000 PSI / 200 BAR
RATED PUMP SPEED	1450 RPM
HYDRAULIC REQUIREMENT	20.0 GPM / 2000 PSI
LUBRICATION	34.5 OZ UDOR LUBE

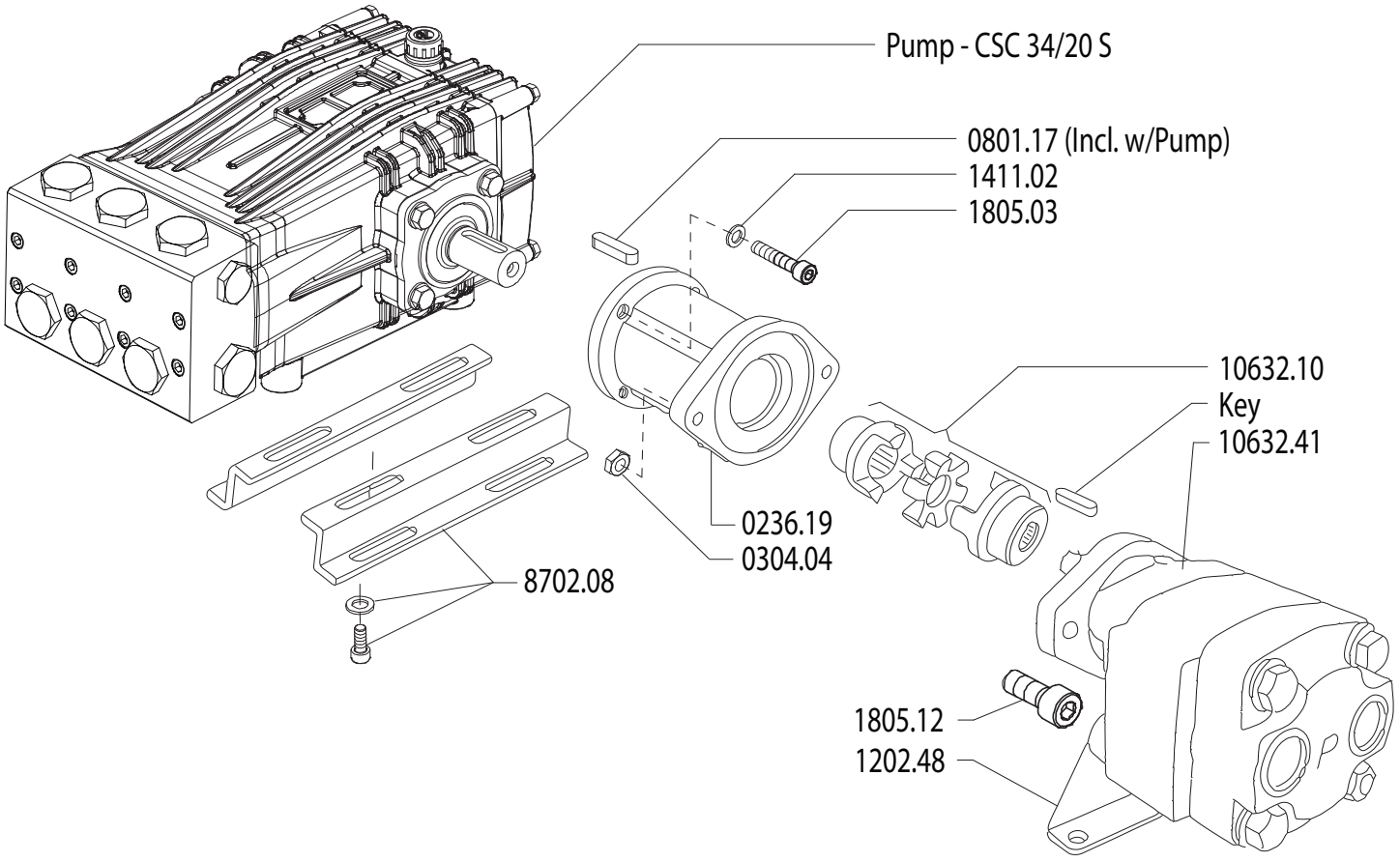

Revised 6-19-2025

Part #	Description	Qty
0236.19	ADAPTER HYDRAULIC MOTOR	1
0304.04	NUT – M10	2
1411.02	WASHER – D8	4
1411.03	WASHER – D10	2
1805.03	ALLEN BOLT M8X30	4

Part #	Description	Qty
1805.12	ALLEN BOLT M10X500	2
8702.10	RAIL KIT WITH BOLTS/WASHERS	1
10632.10	COUPLER 24MMX3/4	1
10632.41	HYDRAULIC MOTOR CK	1
CSC3420S	PUMP - CSC 34/20 S, 9.0 GPM @ 3000 PSI	1

Stainless Steel CSC 34/20 S

MAX FLOW	9.0 GPM / 34 L/MIN
MAX PRESSURE	3000 PSI / 200 BAR
RATED PUMP SPEED	1450 RPM
POWER REQUIREMENT	17.5 HP ELECTRIC
LUBRICATION	34.5 OZ UDOR LUBE

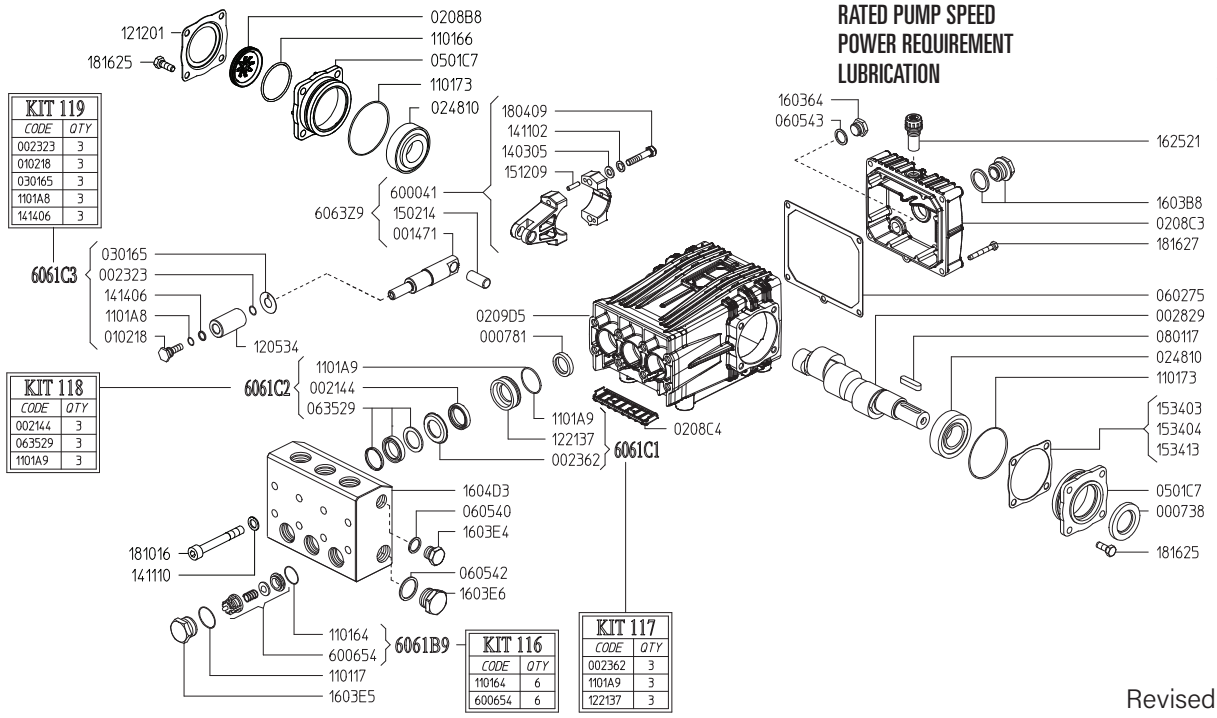

Revised 6-19-2025

Part #	Description	Qty
0007.38	OIL SEAL D30	1
0007.81	OIL SEAL D20	3
0014.71	PLUNGER GUIDE D28 "CS"	3
0021.44	WATER SEAL L.P. D28 BPE [C]	3
0023.23	RING D10.4 [D]	3
0023.62	UPPER RING D28 "CS" SS [B]	3
0028.29	MALE SHAFT D24	1
0102.18	PLUNGER BOLT SS [D]	3
0208.B8	OIL SIGHT GLASS	1
0208.C3	BACK COVER "C/CK"	1
0208.C4	COVER "C/CK"	1
0209.D5	CRANKCASE "C/CK/CH/CS"	1
0248.10	ROLLER BEARING D30	2
0301.65	DISC "CS" SS [D]	3
0501.C7	BEARING FLANGE	1
0602.75	BACK COVER GASKET	1
0605.40	GASKET D21.5	1
0605.42	GASKET D27	1
0605.43	GASKET D17	1
0635.29	HIGH PRESS. SEAL KIT D28 [C]	3
0801.17	KEY A8X7X35 UNI6604	1
1101.06	O-RING - OIL SIGHT GLASS	1
1101.17	O-RING D22,23 (RIF.130)	6
1101.64	O-RING D20,24 (RIF. 3081) 90SHORE [A]	6
1101.73	O-RING D67,95 (RIF.3268)	2
1101.A8	O-RING D9,25 (RIF.2037) [D]	3
1101.A9	O-RING D37,77 (RIF.3150) [B C]	3
1205.34	CERAMIC PLUNGER D28	3
1212.01	RETAINER - OIL SIGHT GLASS	1
1221.37	PRESSURE RING D28 "CS" SS [B]	3

Part #	Description	Qty
1403.05	WASHER D8.4	6
1411.02	SERRATED WASHER D8	6
1411.10	SERRATED WASHER D10	8
1414.06	WASHER D13.4 SS [D]	3
1502.14	PIN D14X32	3
1512.09	PLUG D5X20 UNI1707	6
1534.03	SHIM 0.1 MM	-
1534.04	SHIM 0.2 MM	-
1534.13	SHIM 0.05 MM	-
1603.64	PLUG G3/8	1
1603.B8	OIL PLUG G3/4 + GASKET	1
1603.E4	PLUG G1/2 SS	1
1603.E5	VALVE PLUG "CS" PISTON D28 SS	6
1603.E6	PLUG G3/4 SS	1
1604.D3	HEAD "CS" PISTON D28 SS	1
1625.21	OIL PLUG G3/8	1
1804.09	HEX BOLT M8X40	6
1810.16	ALLEN BOLT M10X90 SS	8
1816.25	HEX BOLT M8X20 SS	8
1816.27	HEX BOLT M6X45 SS	5
6000.41	ROD ASSEMBLY	3
6006.54	VALVE ASSY "CS" W/O O-RING [A]	6
6061.B9	VALVE KIT "CS" (KIT 116)	
6061.C1	SS RING KIT D28 "CS" (KIT 117)	
6061.C2	WATER SEAL KIT D28 (KIT 118)	
6061.C3	PLUNGER KIT D28 "CS" (KIT 119)	

[A] Parts in 6061.B9 (Kit 116).
[B] Parts in 6061.C1 (Kit 117).
[C] Parts in 6061.C2 (Kit 118).
[D] Parts in 6061.C3 (Kit 119).

-

CS SERIES DIMENSIONS

WEIGHT 39 LBS
LUBRICATION 34.5 OZ UDOR LUBE

CS SERIES PUMPS BELOW 10 GPM

Dimensional Drawings are Shown in Millimeters. To Convert to Inches, Multiply Dimension x 0.03937

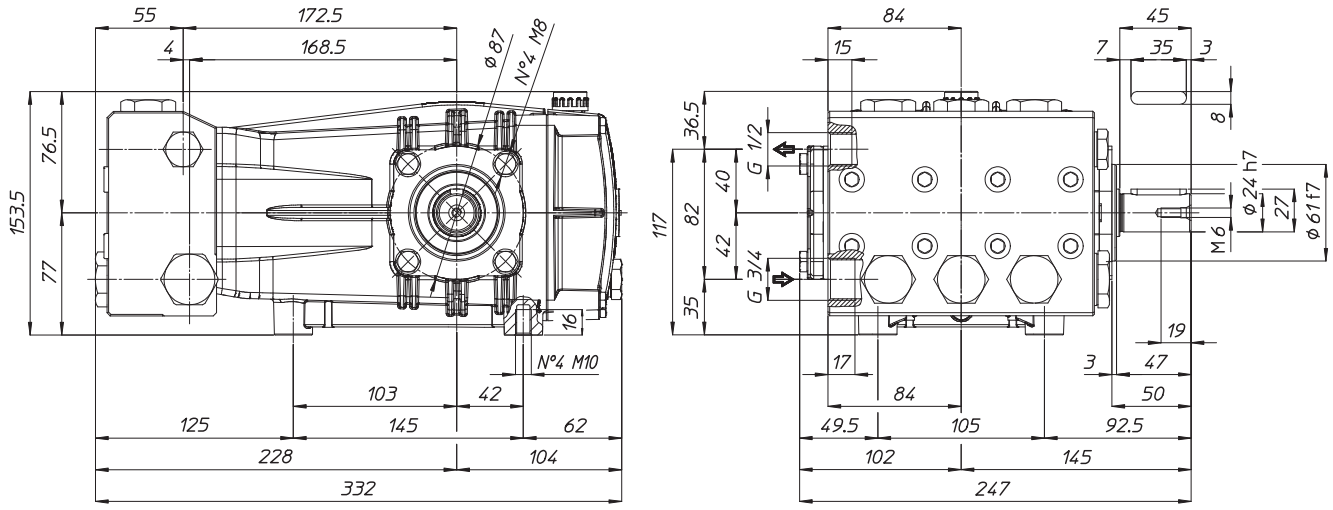

CS SERIES HYDRAULIC DRIVE ASSEMBLIES

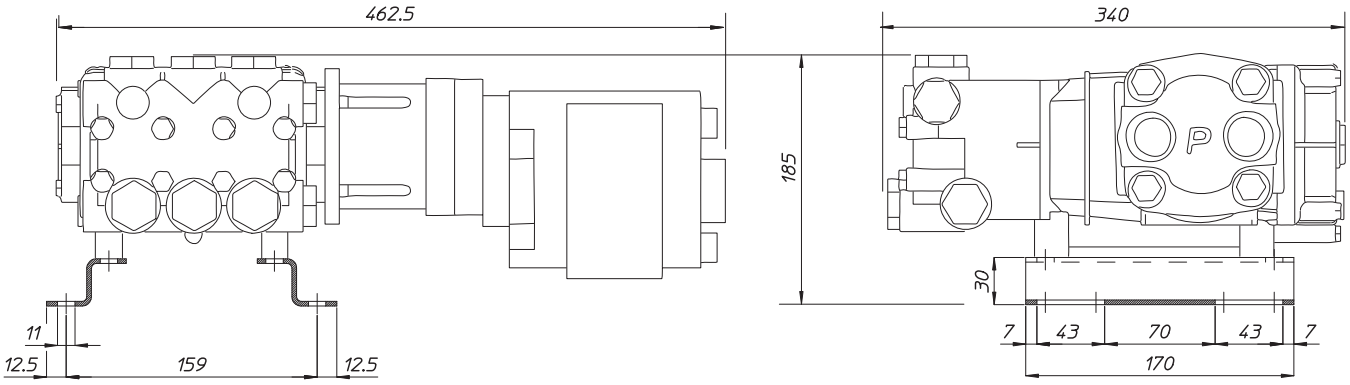

TORQUE SPECS

Ref.	Description	Ft./lb.	Nm	Loctite®
1	Head Bolts	37	50	-
2	Valve Caps	103	140	243
3	Inlet Cap	103	140	-
4	Outlet Cap	103	140	243
5	Bearing Flange Bolts	19	25	-
6	Rear Cover Bolts	8	11	-
7	Connecting Rod Bolts	19	25	270
8	Plunger Bolts	15	20	270
9	Valve Cover Bolts	-	-	-
10	Oil Drain Plug	8	11	-

