

Stainless Steel

140° F - Max Water Temp
1-1/2" F - Inlet Thread
1" F - Discharge Thread
137 oz - Oil Capacity

● AISI 316L pump head

○ bronze connecting-rods

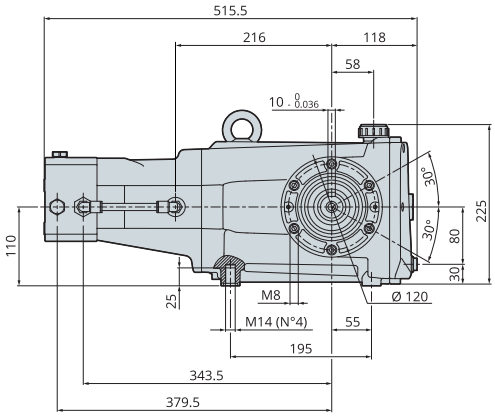

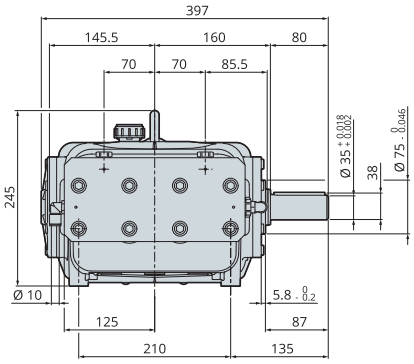

N version

MOD	MAX l/min	MAX gpm	MAX bar	MAX psi	ebhp	rpm	lb NET lbs	BORE DIA mm	STROKE mm	CRANKSHAFT ID STAMP	LIST PRICE $
CR 1000 rpm N version 35mm Solid Shaft											
CR8-1000N ● ○	8	2.11	1000	15,000	21.7	1000	136	14	20	5	$17,820.96
CR15-1000 ● ○	15	4.0	1000	15,000	41.1	1000	136	14	35	4	$19,364.92
CR18-1000 ● ○	18	4.75	1000	15,000	48.9	1000	136	14	42	3	$19,364.92
CR20-1000 ● ○	20	5.3	1000	15,000	54.4	1000	136	14	48	1	$19,364.92

SPECIAL PARTS / KITS

MOD	DESCRIPTION	LIST PRICE
BRACKET-RTP/RTF/RTJ	Rail Kit 2"	$159.38
AR645107	Oil (SAE30) (1.07 gal)	$183.60
BRACKET-RTD	Rail Kit 3.576"	$164.76
AR4181390	Plug-Manifold	$30.40

REPAIR KITS

MOD	DESCRIPTION	QTY	LIST PRICE
AR46907	Valves	11	$2,925.20
AR46906	Pistons	3	$2,037.55
AR46908	Water Seals	10	$1,347.12
AR43616	Oil Seals	4	$119.98