TRIPLEX

TRIPLEX

GENERAL PUMP *A member of the Interpump Group*

CPH Series

Horizontal Triplex Pump

FEATURES

- Forged brass manifold
- Die cast, anodized aluminum oil-bath crankcase
- Solid ceramic plungers
- Ideal for light commercial applications
- Fixed chemical injector built-in

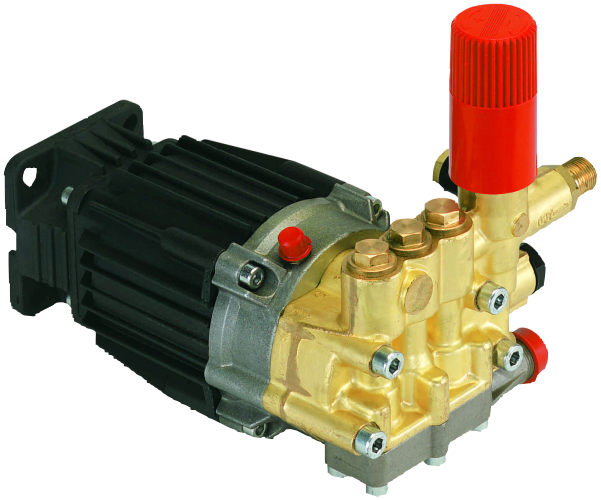

SPECIFICATIONS

Pump Model	CPH2525UI	CPH2530UI
Maximum Volume	2.5 GPM	3.0 GPM
Maximum Discharge Pressure	2500 PSI	
Maximum Pump Speed	3600 RPM	
Horsepower	6.4 GHP	7.7 GHP
Maximum Inlet Pressure	PSI 125	
Maximum Inlet Vacuum	3 ft. water (2.6 in Hg)	
Plunger Bore (in / mm)	.591 / 15	.591 / 15
Plunger Stroke (in / mm)	.218 / 5.53	.254 / 6.46
Oil Capacity	6.75 oz	
Maximum Fluid Temperature	140ºF	
Inlet Port Thread	1/2-14 BSP-M	
Discharge Port Thread	3/8-19 BSP-M	
Shaft Diameter	.750 / 19 mm	
Weight	13.1 lbs	
Dimensions	8.875 x 7.0 x 8.25 in	

DIMENSIONAL DRAWING

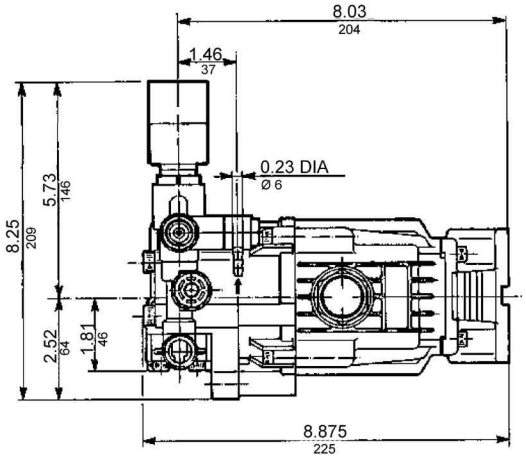

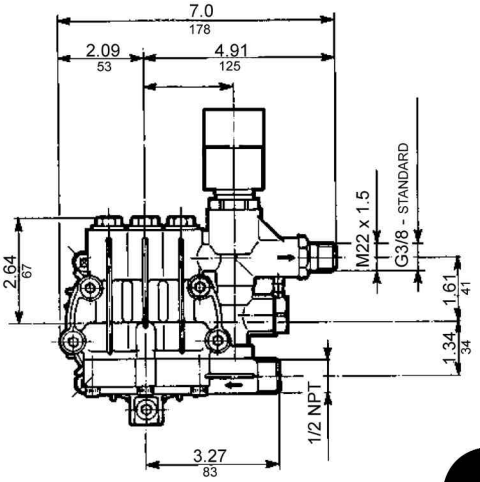

GENERAL PUMP

CPH Series

GENERAL PUMP *A member of the Interpump Group*

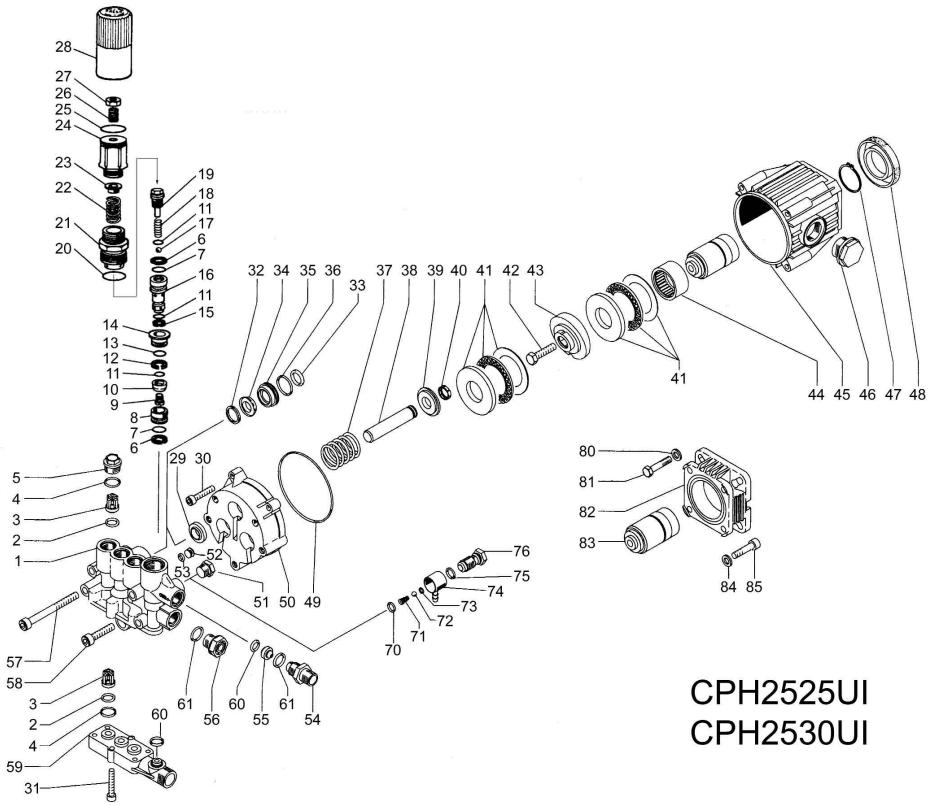

CPH2525UI
CPH2530UI

PARTS LIST

Item	Part	Description	Qty.
1	57120341	Manifold	1
2	701014	O-ring	6
3	36711601	Valve Assy	6
4	701016	O-ring	6
5	98213500	Valve cap	3
6	90506500	Anti-Ext ring	2
7	701614	O-ring	2
8	36316466	Seat	1
9	99150900	Screw	1
10	36319066	Sperical Valve	1
11	90357500	O-ring	3
12	90507500	Anti-Ext ring	1
13	701014	O-ring	1
14	36316570	Guide	1
15	90502500	Anti-Ext ring	1
16	36318970	Piston	1
17	97480000	Ball	1
18	94733200	Spring	1
19	36318870	Stem	1
20	701002	O-ring	1
21	36318470	Guide	1
22	94743600	Spring	1
23	36316970	Spring plate	1
24	36318570	Regulator knob	1
25	701019	O-ring	1
26	99305400	Set screw, M8	1
27	92221800	Nut, M8	1
28	36318751	Handle	1
29	90156700	Oil Seal	3
30	99191400	Screw	4
31	99191200	Screw	6
32	51100051	Head Ring	3
33	90383500	O-ring	3
34	90262000	Packing 15mm	3
35	51080070	Packing Supt 15mm	3
36	90360400	O-ring	3
37	94766400	Spring	3
38	57040102	Piston Assy	3
39	57210370	Spring Plate	3
40	57208551	Clip	3
41	91834700	Bearing Assy, Drive	2
42	99306800	Screw	1
43	57211222	Wobble Plate, 2525	1
	57211122	Wobble Plate, 2530	
44	91845500	Needle Bearing	1
45	57010622	Back Housing	1
46	510276	Plug	1
47	90069500	Clip	1
48	90167500	Seal	1
49	90391700	O-ring	1
50	57210422	Body, Piston Guide	1
51	98205700	Plug	1
52	57210070	Plug	1
53	90381400	O-ring	1
54	10007870	3/8" BSP-M Nipple	1
	10014770	M22 Nipple (optional)	
55	10030766	Nozzle 1.8mm	1
	10015166	Nozzle 2.0mm	
56	98209000	Plug, Plastic	1
57	99321000	Screw	4
58	99306900	Screw	1
59	57140022	Inlet Manifold	1
60	90382300	O-ring	2
61	90383300	O-ring, nozzle	2
70	701012	O-ring	1
71	94821700	Conical spring	1
72	97478200	Ball	1
73	701501	O-ring	1
74	36260451	Fixed Injector	1
75	701013	O-ring	1
76	36256370	Banjo bolt, Injector	1
80	96701400	Washer	4
81	99273000	Screw	4
82	ZFWWS	Flange	1
83	57020165	Hollow shaft	1
84	96693800	Washer	4
85	99186700	Screw	4

REPAIR KITS

KIT NO.	K86	K96	K97	K102	K133	K134
POS's INCLUDED IN KIT	33, 35 36	32-36	32-34 36	6-21	4, 5	2, 3
NUMBER OF ASSEMBLIES IN KIT	3	1	3	1	6, 3	6

TORQUES*

Pos.	Ft/lb
5	2.2
21	3.7
30	7.4
31	7.4
42	36.8
51	14.7
54	29.4
56	5.1
57	15
58	14.7
76	15
85	3.7

* Decrease torque by 20% if threads are lubricated.

ACCESSORIES



Pump Thermal Protector
Part Number - 100558
•145ºF
•1/2" NPT
•1/4" Hose Barb



High Pressure Hose Reel
D30001 - 50' x 3/8" Capacity
D30002 - 100' x 3/8" Capacity
D30004 - 150' x 3/8" Capacity
3500 psi rating
Includes:
• Full-Flow swivel
• Mounting base
• Hand crank with locking mechanism



Water Broom
100869C - 12" - 3 nozzle ports
100870C - 16" - 4 nozzle ports
3000 psi rating
Includes:
• 36" Molded grip lance
• 1/4" Quick coupler
• High Pressure Nozzle Filter

GENERAL PUMP 1174 Northland Drive • Mendota Heights, MN 55120
Phone: (651)454-6500 • Fax: (651)454-4524 • e-mail: sales@gpcompanies.com • www.generalpump.com

300508 Rev. A
4-03