ANNOVI REVERBERI COMFORT-S

COMFORT

Version:

Serial number:

Code: **14300**

10/07/2017

220-240 V - 50/60 Hz | **schuko**

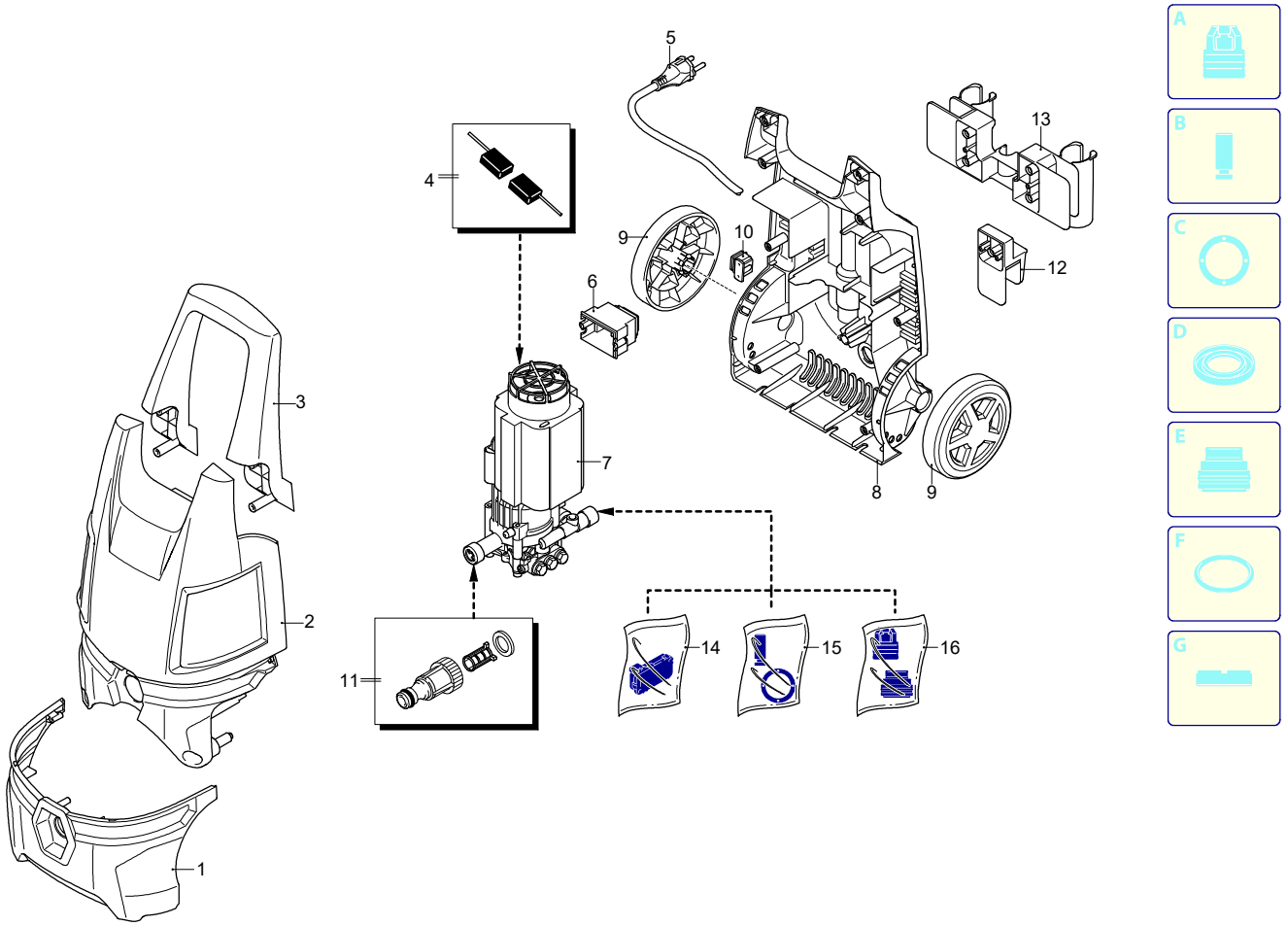

UN_CE_0817-JU

Validity	Pos.	Code	Description	Q
	1	3083480	Casing	1
	2	3083477	Casing	1
	3	3083090	Handle	1
	4	3082580	Brush kit for motor	1
	5	50940	Cable	1
	6	3080170	Switch	1
	7	3081210	Electric pump assembly	1
	8	3082910	Base	1
	9	3080150	Wheel	2
	10	3080580	Cable gland	1
	11	3082130	Water coupling kit	1
	12	3080280	Accessories carrier	1
	13	3080190	Accessories carrier	1
	14	3081280	TSS kit	1
	15	3081270	Piston + seals kit	1
	16	3081290	Valves + seals kit	1

ANNOVI REVERBERI COMFORT-S

COMFORT

Version:

Serial number:

Code: **14300**

10/07/2017

220-240 V - 50/60 Hz

schuko

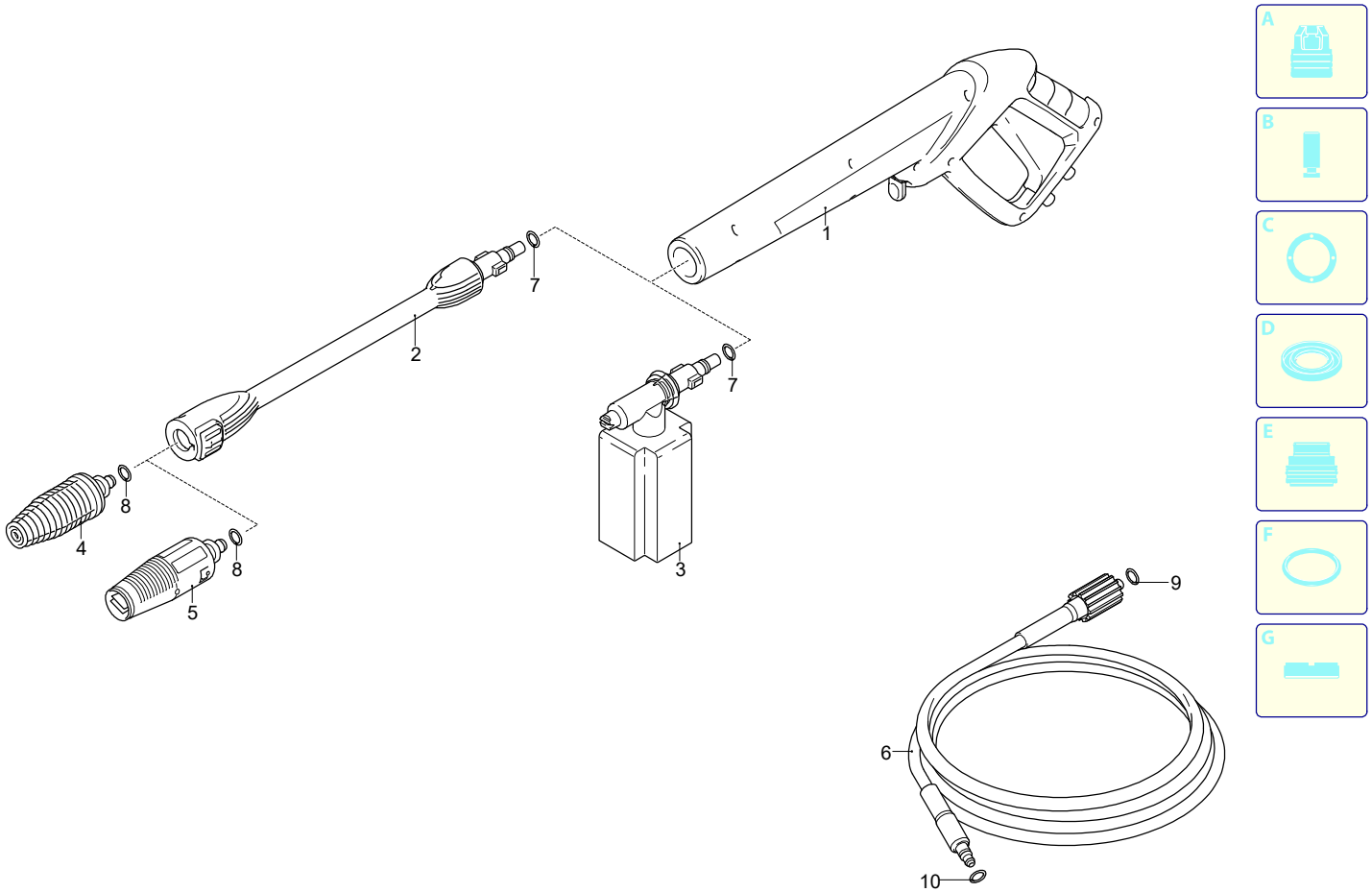

Validity	Pos.	Code	Description	Q
	1	4100786	Gun	1
	2	4100775	Extension	1
	3	50972	Tank	1
	4	4100800	Lance head	1
	5	3980110	Lance head	1
	6	50969	High pressure hose	1
	7	3083700	O-ring	2
	8	3083370	O-ring	2
	9	3083380	O-ring	1
	10	3083390	O-ring	1

UN_CE_2229-FN