ANNOVI REVERBERI
The Power of Experience

COLD 2015 N

Version:
Serial number:
Code: **24397**

07/11/2015

400 V - 50 Hz

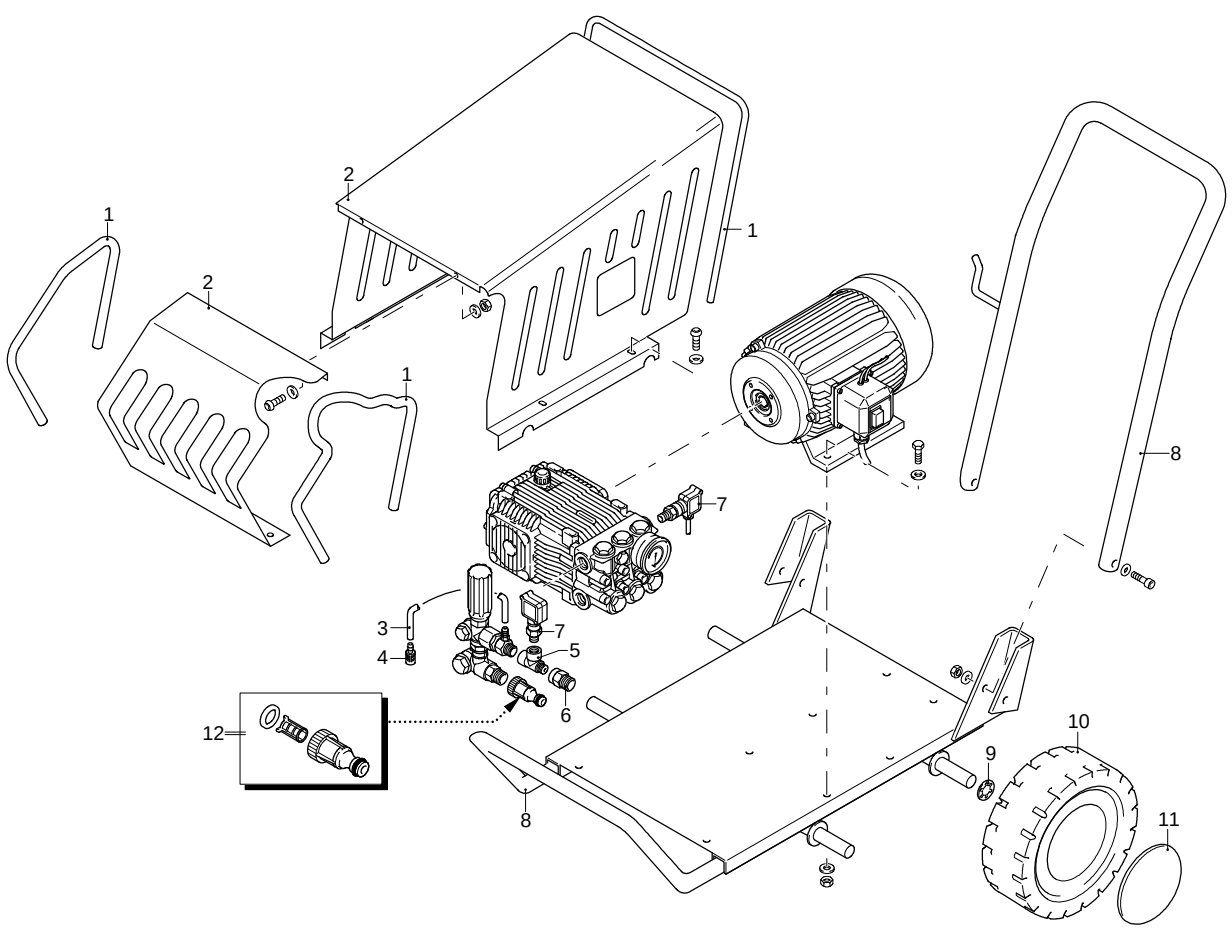

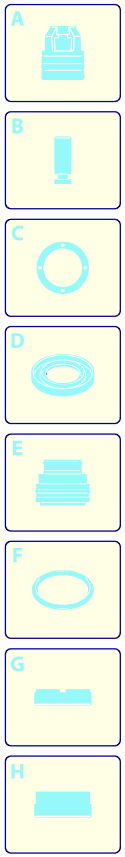

Validity	Pos.	Code	Description	Q
	1	50601	Gasket	3
	2	51387	Casing	1
	3	1262790	Detergent hose	1
	4	1341030	Filter	1
	5	50531	Fitting	1
	6	1123960	Fitting	1
	7	51219	Pressure switch	3
	8	50641	Frame	1
	9	50447	Spring	4
	10	50627	Wheel	4
	11	50628	Guard	4
	12	3260170	Fitting	1

UN_CE_1072-ET

ANNOVI REVERBERI
The Power of Experience

COLD 2015 N

Version:
Serial number:
Code: **24397**

07/11/2015

400 V - 50 Hz

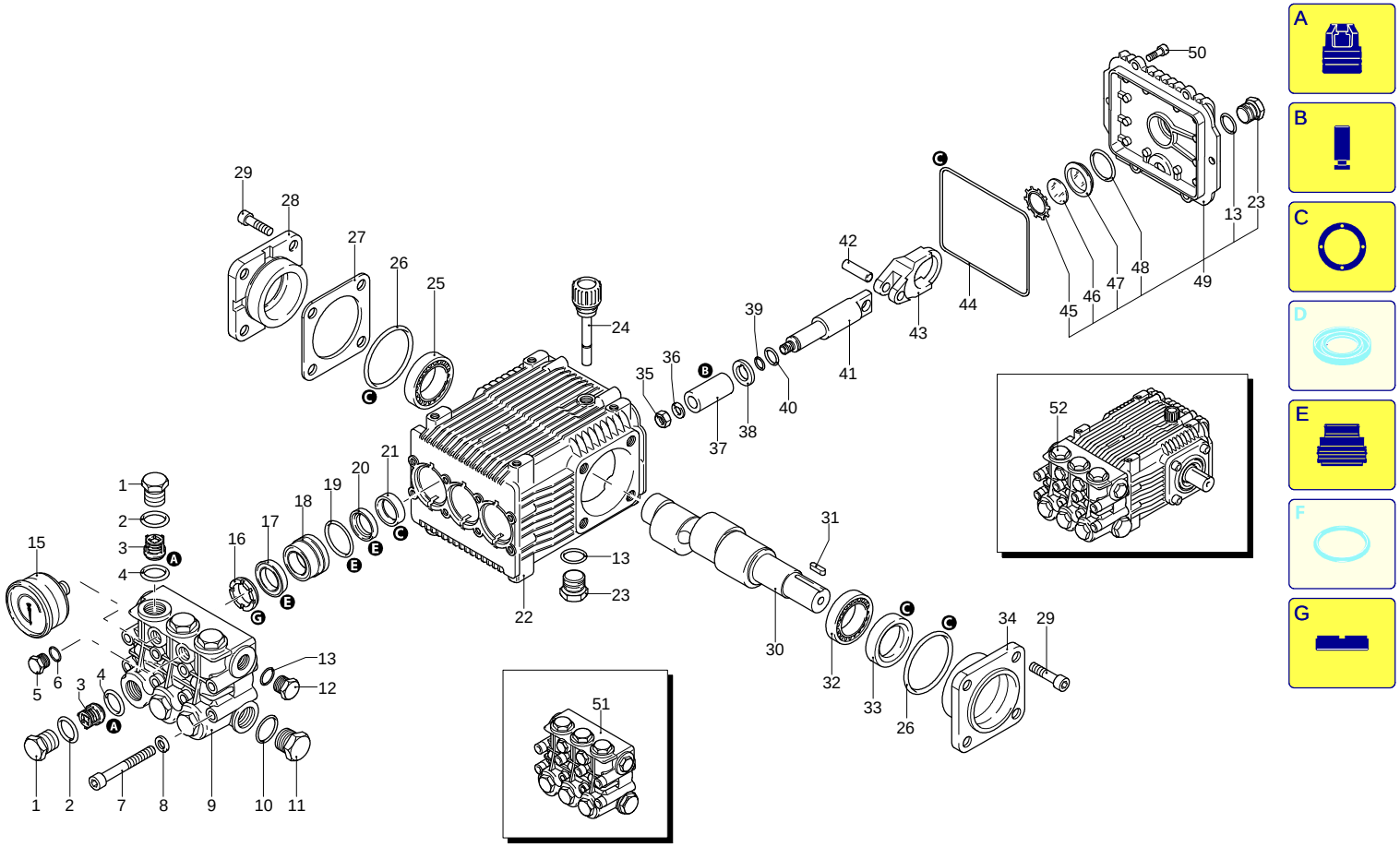

UN_CE_0113-MW

Validity	Pos.	Code	Description	Q
	1	960090	Plug	6
	2	960160	O-ring	6
	3	1389051	Complete valve	6
	4	880830	O-ring	6
	5	880581	Plug	2
	6	820510	O-ring	2
	7	820150	Screw	8
	8	1381850	Washer	8
	9	1381071	Head	1
	10	180101	O-ring	1
	11	820361	Plug	1
	12	1980740	Plug	1
	13	740290	O-ring	3
	15	1381580	Pressure gauge	1
	16	960110	Ring	3
	17	1382740	Water seal	3
	18	1380090	Piston guide	3
	19	961240	O-ring	3
	20	880330	Water seal	3
	21	1383130	Ring	3
	22	1382770	Pump body	1
	23	1980740	Plug	2
	24	880130	Plug	1
	25	2280240	Bearing	1
	26	640030	O-ring	2
	27	1380120	Shim 0.10 mm	1
	27	1380130	Shim 0.20 mm	1
	27	1380530	Shim 0.25 mm	1
	27	1382810	Shim 0.05 mm	1
	28	1380050	Support	1
	29	850370	Screw	8
	30	2280060	Shaft	1
	31	1380520	Key	1
	32	840370	Bearing	1
	33	180340	Ring	1
	34	1380040	Support	1
	35	962010	Nut	3
	36	962000	Washer	3
	37	1380940	Piston	3
	38	1380950	Plate	3
	39	600180	O-ring	3
	40	1080401	Ring	3
	41	1380920	Piston	3
	42	1380060	Pin	3
	43	1383050	Connecting-rod	3
	44	1780510	O-ring	1
	45	1260430	Ring	1
	46	1780690	Plate	1
	47	1260250	Level gauge	1
	48	1140450	O-ring	1
	49	1789010	Cover	1
	50	1343510	Screw	6
	51	1389270	Head assembly	1
	52	20897	Pump assembly	1
	A	2864	Valve kit	1
	B	2757	Piston kit	1
	C	1855	Oil seal kit	1
	E	1857	Water seal kit	1
	G	1829	Support ring kit	1

ANNOVI REVERBERI
The Power of Experience

COLD 2015 N

Version:
Serial number:
Code: **24397**

07/11/2015

400 V - 50 Hz

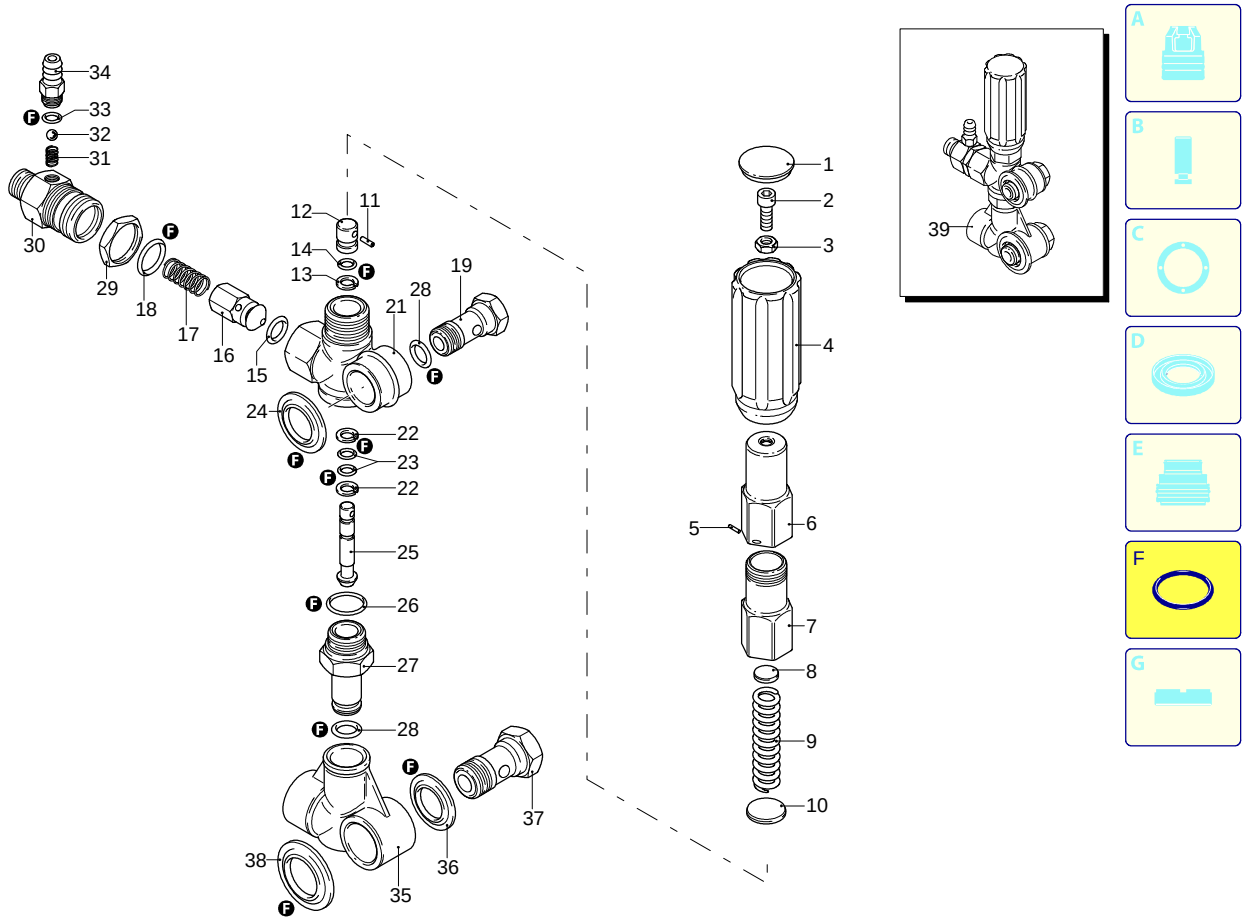

Validity	Pos.	Code	Description	Q
	1	1560580	Plug	1
	2	540290	Screw	1
	3	1660210	Nut	1
	4	1560400	Knob	1
	5	1080070	Pin	1
	6	1560420	Screw	1
	7	1560410	Guide	1
	8	1560440	Wobble plate	1
	9	1560350	Spring	1
	10	1080610	Wobble plate	1
	11	1080660	Pin	1
	12	1080540	Piston	1
	13	391000	O-ring	1
	14	1080640	Ring	1
	15	1560150	O-ring	1
	16	1560100	Shutter	1
	17	1560140	Spring	1
	18	180101	O-ring	1
	19	1540272	Screw	1
	21	1560010	Valve body	1
	22	1080550	Ring	2
	23	480480	O-ring	2
	24	1560280	Washer	1
	25	1560320	Piston	1
	26	880270	O-ring	1
	27	1560051	Fitting	1
	28	390080	O-ring	2
	29	1560510	Nut	1
	30	1560530	Fitting	1
	31	1560520	Spring	1
	32	1250280	Ball	1
	33	480480	O-ring	1
	34	1560490	Hose tail	1
	35	1540020	Suction fitting	1
	36	1540120	Washer	1
	37	1540090	Fitting	1
	38	1560290	Washer	1
	39	20082	Complete valve	1
	F	2611	Gasket kit	1

ANNOVI REVERBERI
The Power of Experience

COLD 2015 N

Version:
Serial number:
Code: **24397**

07/11/2015

400 V - 50 Hz

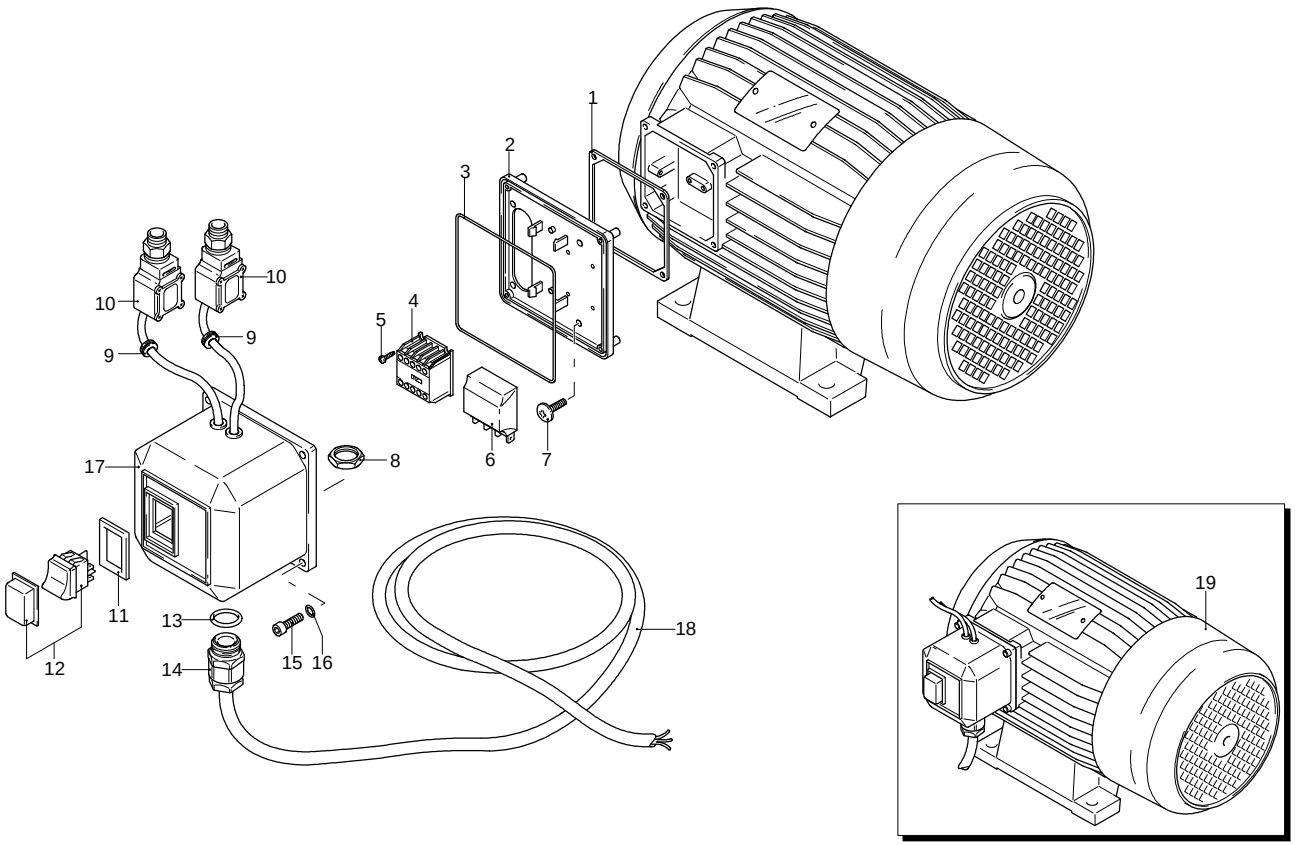

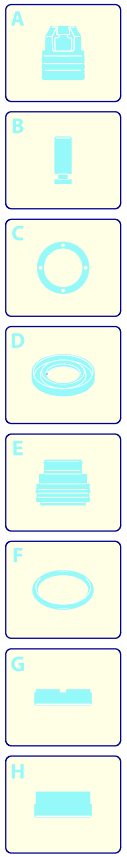

Validity	Pos.	Code	Description	Q
	1	50068	Gasket	1
	2	1700080	Plate	1
	3	1940410	O-ring	1
	4	2360950	Mini-contactor	1
	5	1261570	Screw	1
	6	2360590	Board	1
	7	1460460	Screw	1
	8	1700590	Nut	1
	9	2021480	Gland	2
	10	51219	Pressure switch	2
	11	1341140	Gasket	1
	12	2360730	Switch	1
	13	880270	O-ring	1
	14	1382380	Cable gland	1
	15	1261560	Screw	1
	16	1080190	O-ring	1
	17	1701070	Box	1
	18	1700640	Cable	1
	19	44496	Motor	1

UN_CE_1046-ET

COLD 2015 N

Version:

Serial number:

Code: **24397**

07/11/2015

400 V - 50 Hz

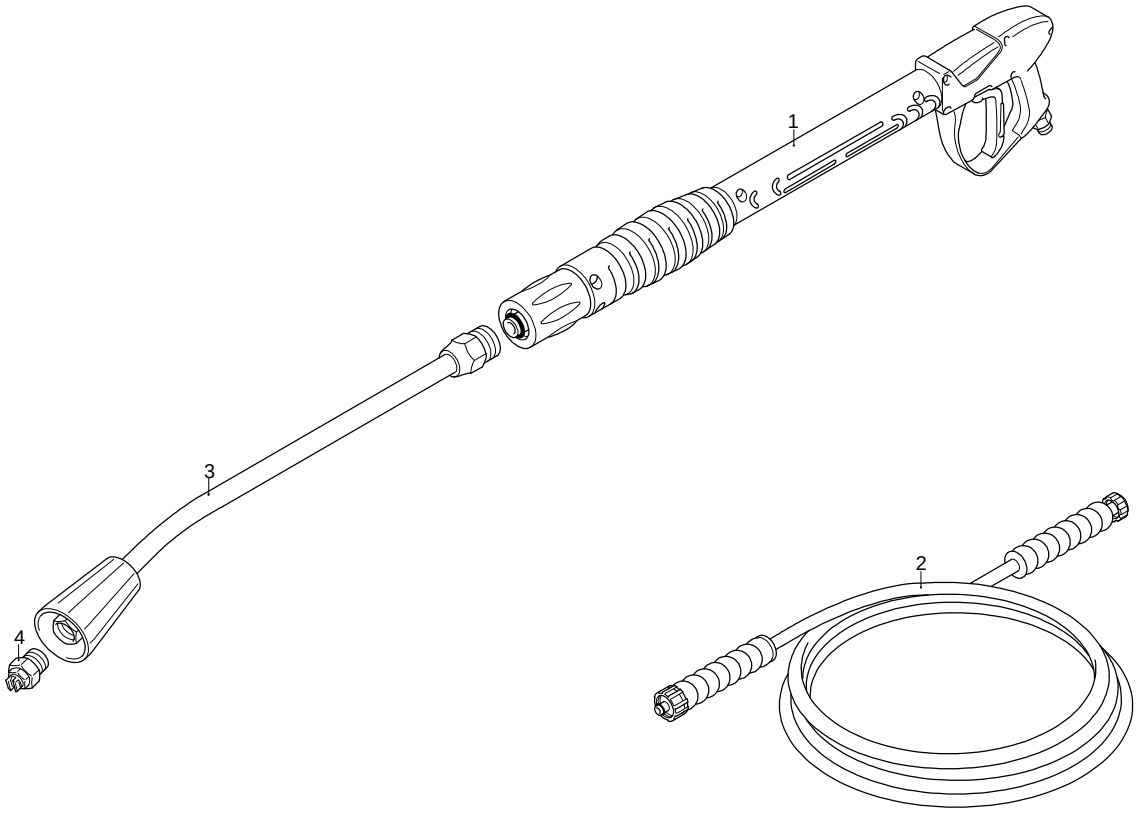

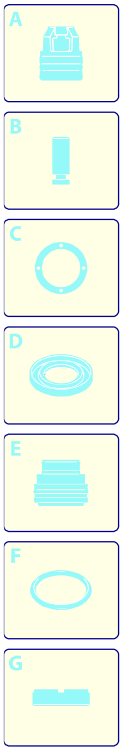

Validity	Pos.	Code	Description	Q
	1	41847	Gun	1
	2	3160170	High pressure hose	1
	3	40826	Lance	1
	4	3086	Nozzle	1

UN_CE_1696-FQ