DAVEY

ISO2858 Heavy Duty Industrial Centrifugal Pump

CM Series

Installation and Operating Instructions

ISOspec®



IMPORTANT
Please read carefully

daveywater.com

Please pass these instructions on to the operator of this equipment.

Contents:

WARNINGS 2
INTRODUCTION 3
SPECIFICATIONS 3
INSPECTION OF PUMP 3
- Delivery 3
- Storage 3

INSTALLATION LOCATION 3
- Foundations 3

SUCTION PIPING 4
DISCHARGE PIPING 4
ELECTRICAL CONNECTION 5
- Starting 5

PUMP STRUCTURE 5
TROUBLESHOOTING 6
LUBRICATION 6
MOTOR OPERATION AND MAINTENANCE 7
- Installation 7
- Coupling Drive/Service 7
- Alignment/Service 7
- Operation 7
- Number of Starts per hour 7
- Permitted Starting Time 7
- Maintenance Instructions 8
- Sealed Bearings 8
- Open (Regreasable) Bearings 9
- Recommended Lubricant 9

DAVEY WARRANTY 10



WARNING: This appliance is not intended for use by persons (including children) with reduced physical sensory or mental capabilities, or lack of experience and knowledge, unless they have been given supervision or instruction concerning use of the appliance by a person responsible for their safety. Children should be supervised to ensure that they do not play with the appliance.



WARNING: When servicing or attending pump, always ensure power is switched off and lead unplugged. Electrical connections should be serviced only by qualified persons.



ATTENTION: Care should also be taken when servicing or disassembling pump to avoid possible injury from hot pressurised water. Always isolate pump, relieve pressure by opening a valve on the discharge side of the pump and allow any hot water in pump to cool before attempting to dismantle.



ATTENTION: During servicing, use only approved, non-petrochemical based o-ring and gasket lubrication. If unsure, consult your Davey Dealer for advice.

WARNING: Failure to follow these instructions and comply with all applicable codes may cause serious bodily injury and/or property damage.

WARNING: If the supply cord is damaged, it must be replaced by the manufacturer, its service agent or similarly qualified persons in order to avoid a hazard.

INTRODUCTION

Thank you for purchasing a quality Davey product. It is our commitment to satisfy our customers by offering our very best service.

This manual contains instruction for installation, operation and maintenance of ISOspec® CM series of single stage, non-self priming, centrifugal pumps. Therefore, please read it carefully before use to obtain a long satisfying service life of the purchased unit.

Davey ISOspec® CM series centrifugal pumps are designed with high efficiency and low maintenance features.

SPECIFICATIONS

Model designation (example)

CM 125×100-200

- Nominal dia. of impeller (mm)
- Dia. of outlet (mm)
- Dia. of inlet (mm)
- Series code of pump

INSPECTION OF PUMP

Always check on receipt of delivery you have received the correct pump unit. To identify, see above specifications and label below. Check correct motor kW & speed on motor nameplate (attached to motor) prior to installation.

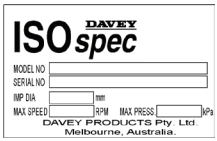

Delivery

Upon receipt the unit should be thoroughly inspected for any damage sustained during transit. Any equipment damage or shortfall should be immediately advised to your nearest Davey office or Davey customer service centre.

Storage

If the unit is not to be installed immediately, it should be stored in a clean, dry and preferably warm environment. Shafts of stored motors should be rotated occasionally. Specific vibration during storage may lead to "brinelling" of the bearings, therefore motors that are subject to extended storage where vibration exists, should be fitted with bearing locks.

INSTALLATION LOCATION

It is important to select a site as close to the liquid source as possible. When a suction lift is unavoidable, install the pump as near to the water level as possible (see suction piping). You should always check the maximum permissible lift of the pump from its performance curve.

Foundations

The pump unit should be mounted on a foundation that is substantial enough to withstand the weight of the unit and large enough to accommodate all mounting feet so they can be securely fixed to avoid movement.

SUCTION PIPING

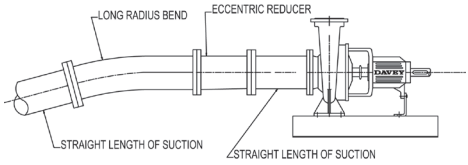

PREFERRED ARRANGEMENT FOR SUCTION LIFTS

All fittings and suction piping should be free of air leaks.

When a suction lift or long suction lengths are unavoidable, consideration should be given to over sizing the suction line to reduce suction losses.

On suction lifts a foot valve will be required, sized equal to the suction line size. For applications on creek beds or dams, please install a foot valve and strainer, well submerged below the surface, to reduce whirlpools and air inclusion. Air inclusion can result in cavitation reducing the pump performance and eventually destroying the pump or its components.

If bends are required, long radius bends should be used. To help ensure a less turbulent entry into the pump, a straight length of pipe should be installed between any bends and the pump inlet. This straight length should be at least 2.5 times the pump inlet diameter in length. Pipework supports should be installed to both inlet and outlet pipes to ensure that they are supported independently of the pump flanges.

DISCHARGE PIPING

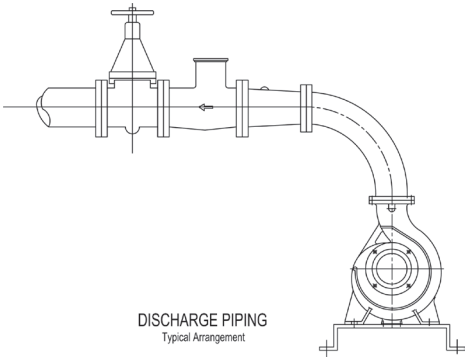

DISCHARGE PIPING
Typical Arrangement

Discharge piping must be selected of a size that would equal the discharge of the pump. For long discharge lengths, consideration should be given to using larger diameter pipework. Larger size pipes have lower pressure losses for a given flow rate, and may help reduce the running costs for your pumping system.

Talk to your nearest Davey dealer to calculate all system losses. To avoid air pockets in discharge lines at high points, vent cocks may be required to release air blocks accumulated within the system. Air pockets may affect the performance of the pump. A throttling valve should be installed in the discharge line to ensure the pump works within the performance curve.

ELECTRICAL CONNECTION

WARNING: When installing, servicing or attending pump, always ensure power is switched off and lead unplugged. Electrical connections should be serviced only by qualified persons. If the electrical supply lead is damaged, it must be replaced.

Ensure all electrical connections are solid and continuous. Check motor starter and overloads for correct rating and trip setting. All circuit breakers, HRC fuses or protective devices associated with the motor must be rated to suit motor running current and starting characteristics.

Starting

Caution: Do not attempt to run pump if it has not been filled with water (primed).

1. Ensure the suction line & pump casing is full of water open suction valve if fitted.
2. Check power is off & rotate the pump shaft slowly to release any trapped air within the pump casing.
3. Close the discharge valve.
4. Check the direction of rotation on the pump casing or motor cover.
5. Prior to initial start up, the following steps must be taken:
   - Insulation resistance test. On machines up to 600 volt, the minimum value should be 1MΩ.
   - Thermistors if fitted, should be checked for continuity with a multimeter and never mega-tested.
   - Ensure supply voltage and frequency correspond to the motor nameplate ratings.
   - Ensure shaft turns freely before initial start.
   - Measure stator resistance and record in Log Book.
6. If this is correct you may now start the pump, when it reaches full speed you will see the pressure in the discharge line rise. Slowly open the discharge valve until the pump adjusts to maintain its duty point.

PUMP STRUCTURE

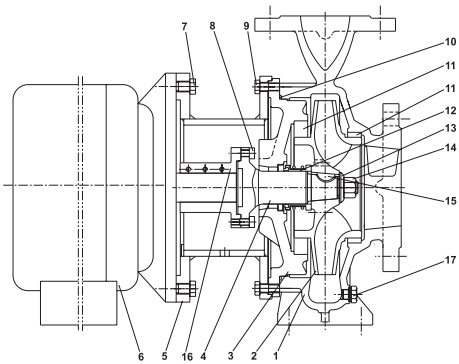

1. Pump casing
2. Impeller
3. Rear casing cover
4. Stub shaft
5. Bell housing
6. Motor
7. Bolt
8. Bolt
9. Bolt
10. O-ring
11. Bronze wear ring
12. Mechanical shaft seal
13. Impeller washer
14. Impeller nut
15. Impeller key
16. Muff coupling
17. Volute drain plug

TROUBLESHOOTING

Pump is running but failing to deliver water or desired pressure.

1. Turn the unit off.
2. Check suction line is free of debris or blockages and check that the pump has not lost its prime. If so, remove blockage and repeat Starting at step 1.
3. Check that the suction valve is open.
4. Check that the discharge valve is open.
5. Check for air leaks. These may not always be visible to the naked eye unless pressure is applied to the suction line.
6. Check that the suction line is not too long.
7. Is suction line to pump excessive?
8. Is the foot valve stuck open or undersized?
9. Is speed too slow?
10. Check motor direction rotation.
11. Check for possible clogging in impeller vanes
12. Is the discharge piping undersized for applications.

Excessive Vibration

1. Turn the unit off.
2. Check the motor is rotating in correct direction.
3. Check both motor feet & pump feet are secured properly.
4. Check drive coupling is secured tightly to the motor shaft.
5. Check motor bearings are OK.
6. Impeller could be partially blocked causing imbalance.

Noisy Operation

1. Turn the unit off.
2. Check motor bearings.
3. Check pump is primed.
4. Check suction line is not damaged, causing insufficient supply & resulting in cavitation.
5. Check you are not pumping solids.

High Power Consumption

1. Check direction of rotation.
2. Check operating speed on the motor matches the intended performance curve speed.
3. Check that the estimated head is correct, as pump may be running down on its curve, producing high flow, but drawing more power. Throttle the pump back on to its curve via discharge gate valve or reduce impeller diameter.
4. The Specific Gravity or Density of the liquid is greater than 1kg/litre affecting power draw.
5. Check impeller diameter for the correct size, to establish maximum power requirement at duty point.

LUBRICATION

Motor bearings are lubricated with lithium based rolling contact bearing grease, suitable for operation with-in the cooling air temperature range of -20ºC to +55ºC. For operation outside this temperature range, special lubricants are required.

Special lubricants or additional maintenance may be required in the case of motors exposed to comparatively high degrees of pollution, high humidity, increased or changed bearing loads, or prolonged continuous operation.

MOTOR OPERATION AND MAINTENANCE

Installation

All motors must be installed in such a manner as to ensure the air intake is not obstructed. Refer to dimension "BL" in the cooling section of this catalogue. Bed plates or slide rails should be firmly fixed to a solid, level foundation to ensure the motor remains rigid and vibration free. Shims or packers (if required) must be of adequate size and placed adjacent to and between base fixings. Protective transport coatings on shafts and/or flanges must be removed prior to connection to the driven load.

Coupling Drive/Service

In fitting couplings or pulleys to the motor shaft, care must be taken to ensure the roller/ ball bearings are not damaged. Tapped holes are provided in shaft extensions to assist in the fitment of couplings and/or pulleys. Under no circumstances should couplings and/or pulleys be impact driven onto the shaft. Couplings or pulleys should be independently balanced with a half key.

Alignment/Service

Great care must be taken in aligning the complete unit, since misalignment can cause rapid deterioration of bearings and lead to other mechanical failures due to the stress produced. After final tightening of foundation bolts, machine alignment should be rechecked as bed plates could distort. No end thrust should be applied to the motor without express approval.

Operation

Standard motors are designed for a 415 volt (±5%) 3 phase, 50 Hertz supply. Use of standard motors on other supply systems should be verified with our office prior to installation. All units are S1 rated to AS1359 and associated standards, for operation below 1000 metres at a maximum ambient temperature of 40°C.

For operation in conditions other than that above please contact Davey.

Electric motor starting imposes severe thermal stress on the motor, the frequency of starting should be minimized to ensure optimum machine life.

Number of Starts per hour

The number of starts per hour is dependant on the inertia of the driven load and the load torque demand. A guide to generally acceptable starts per hour would be as per table.

For greater number of starts per hour, please contact Davey.

Starts per hour				
Frame	**2 pole**	**4 pole**	**6 pole**	**8 pole**
71	-	40	-	-
80	20	40	40	-
90	16	30	40	-
100	16	30	40	40
112	16	30	40	40
132	10	20	25	25
160	10	20	25	25
180	8	15	20	20
200	6	12	12	12
225	5	10	10	10
250	4	8	8	8
280	3	6	6	6
315	3	4	4	4

Permitted Starting Time

In respect to the temperature rise of the motor, starting time (i.e., from rest to operational speed) should not exceed the time indicated in the following table. Motor must be allowed to cool prior to each start.

Maximum starting time (sec)					
Frame	**Starting Method**	**2 pole**	**4 pole**	**6 pole**	**8 pole**
71	D.O.L.	-	26	-	-
80	D.O.L.	15	26	40	-
90	D.O.L.	10	15	25	-
100	D.O.L.	12	13	18	40
112	D.O.L.	10	10	18	35
132	D.O.L.	14	12	12	25
160-355	D.O.L.	15	15	20	20
160-355	star-delta	45	45	60	60

Maintenance Instructions

The following maintenance instructions apply to all SGA motors except for hazardous location motors. For SGAE, SGAN and SGAD motors maintenance must be carried out by an authorized service agent. Contact CMG for detailed instructions.

To obtain maximum service life from your electric motor, it is recommended the following maintenance be implemented and recorded in a plant log book.

A. Ensure air intake space is unobstructed.

B. On a weekly basis use an air hose to ensure all airways are clear and free of dust.

C. Do not wash the motor down unless it is IP66 rated.

D. On a quarterly basis:-

i) Check motor terminals for tightness and contact.

ii) If terminal lug/lugs are discolored, re-terminate.

iii) Check operation of starting equipment, ensuring all terminations are tight.

iv) Check mechanical operation of thermal overload.

v) Check mechanical operation of thermistor relay (if fitted).

vi) Check operation of space heaters (if fitted).

E. On a six (6) monthly basis, in addition to the items in 'D' :-

i) Check stator resistance (compare to original and enter in log book)

ii) Check supply voltage at motor terminals.

iii) Check bearings for noise/overheating.

F. On an annual basis, in addition to the items in 'D' and 'E' :-

i) Re-grease bearings in line with chart below. Note: As indicated in the chart, some bearings may require more frequent grease replacement.

ii) Strip motor down and clean thoroughly.

iii) Check bearings for wear/damage - replace as necessary.

iv) Check all machine bolts for cracks or damage - replace as necessary.

v) Check all holding bolts for signs of fatigue/damage - replace as necessary.

vi) After re-assembly, check and record:-
Full Load Current
Full Load Voltages
Full Load Speed

vii) Ensure cooling fan is operational.

G. Ensure plant log book records commissioning data and compare maintenance data with original.

Sealed Bearings

The required replacement interval for sealed bearings is generally determined by the grease life which is dependant on operating temperature, operating speed, the limiting speed of the bearing and the type of grease. Under normal operating conditions the following relationship applies:-

$$\log t = 6.54 - 2.6\frac{n}{N} - \left(0.025 - 0.012\frac{n}{N}\right)T$$

Where:

t = Average grease life (hours)

n = Speed (RPM)

N = Bearing limiting speed with grease lubrication (RPM)

T = Operating temperature (°C)

For further information, please contact your nearest CMG office for advice.

Open (Regreasable) Bearings

Recommended Grease Replenishment Intervals (Hours)[1]

Bearing Number	Bearing bore (mm)	Qty of grease (g)	3,000 r/min		1,500 r/min		1,000 r/min		750 r/min	
			Ball	Roller	Ball	Roller	Ball	Roller	Ball	Roller
6312/NU312	60	20	3800	1900	10100	5050	16000	8000	20000	10800
6313/NU313	65	25	3400	1700	9400	4700	15100	7500	20000	10300
6314/NU314	70	30	3000	1500	8800	4400	14300	7150	19500	9750
6315/NU315	75	30	2570	1285	8200	4100	13500	6750	18500	9250
6316/NU316	80	35	2200	1100	7600	3800	12800	6400	17700	8850
6317/NU317	85	40	1800	900	7100	3550	12100	6050	16800	8400
6318/NU318	90	45	1650	825	6600	3300	11500	5750	16000	8000
6319/NU319	95	45	1500	750	5700	2850	9000	4500	14600	7300
6322/NU322	110	60	1200	600	4800	2400	8300	4150	13400	6700

[1] Based on maximum grease service life of 20,000 hours.

It should be noted that for motors fitted with Ball and Roller bearings, the lubrication intervals for both bearings should be based on the roller bearing data.

The re-lubrication intervals recommended are calculated on the basis of normal working conditions.

Note: Air operated grease guns should not be used.

Replenishment of grease media should be by means of a hand held grease gun whilst motor is running with relief plate removed.

Recommended Lubricant

Use Lithium based grease such as Shell Alvania R3 unless otherwise specified. SGAH, SGASS and SGAHS require extra high temperature grease, Magnalube G or equivalent.

Davey Repair or Replacement Warranty

In the unlikely event in Australia or New Zealand that this Davey product develops any malfunction within 24 months of the date of original purchase due to faulty materials or manufacture, Davey will at our option repair or replace it for you free of charge, subject to the conditions below.

Should you experience any difficulties with your Davey product, we suggest in the first instance that you contact the Davey Dealer from which you purchased the Davey product. Alternatively you can phone our Customer Service line on 1300 367 866 in Australia, or 0800 654 333 in New Zealand, or send a written letter to Davey at the address listed below. On receipt of your claim, Davey will seek to resolve your difficulties or, if the product is faulty or defective, advise you on how to have your Davey product repaired, obtain a replacement or a refund.

Your Davey 24 month warranty naturally does not cover normal wear or tear, replacement of product consumables (i.e. mechanical seals, bearings or capacitors), loss or damage resulting from misuse or negligent handling, improper use for which the product was not designed or advertised, failure to properly follow the provided installation and operating instructions, failure to carry out maintenance, corrosive or abrasive water or other liquid, lightning or high voltage spikes, or unauthorized persons attempting repairs. Where applicable, your Davey product must only be connected to the voltage shown on the nameplate.

Your Davey 24 month warranty does not cover freight or any other costs incurred in making a claim. Please retain your receipt as proof of purchase; you **MUST** provide evidence of the date of original purchase when claiming under the Davey 24 month warranty.

Davey shall not be liable for any loss of profits or any consequential, indirect or special loss, damage or injury of any kind whatsoever arising directly or indirectly from Davey products. This limitation does not apply to any liability of Davey for failure to comply with a consumer warranty applicable to your Davey product under the Australian or New Zealand legislation and does not affect any rights or remedies that may be available to you under the Australian or New Zealand Consumer Legislation.

In Australia, you are entitled to a replacement or refund for a major failure and for compensation for any other reasonably foreseeable loss or damage. You are also entitled to have the goods repaired or replaced if the goods fail to be of acceptable quality and the failure does not amount to a major failure.

Should your Davey product require repair or service after the guarantee period; contact your nearest Davey Dealer or phone the Davey Customer Service Centre on the number listed below.

For a complete list of Davey Dealers visit our website (davey.com.au) or call:

DAVEY

Davey Water Products Pty Ltd
A member of the Waterco Group
ABN 18 066 327 517

daveywater.com

AUSTRALIA

Customer Service Centre
6 Lakeview Drive,
Scoresby, Australia 3179
Ph: 1300 232 839
Fax: 1300 369 119
Email: sales@davey.com.au

NEW ZEALAND

Customer Service Centre
7 Industry Road,
Penrose, Auckland 1061
Ph: 0800 654 333
Fax: 0800 654 334
Email: sales@dwp.co.nz

® Davey is a registered trademark of Davey Water Products Pty Ltd. © Davey Water Products Pty Ltd 2026.

DAVEY

Davey Water Products Pty Ltd
A member of the Waterco Group
ABN 18 066 327 517

daveywater.com

AUSTRALIA

Customer Service Centre
6 Lakeview Drive,
Scoresby, Australia 3179
Ph: 1300 232 839
Fax: 1300 369 119
Email: sales@davey.com.au

NEW ZEALAND

Customer Service Centre
7 Industry Road,
Penrose, Auckland 1061
Ph: 0800 654 333
Fax: 0800 654 334
Email: sales@dwp.co.nz

® Davey is a registered trademark of Davey Water Products Pty Ltd. © Davey Water Products Pty Ltd 2026. 49720-8