CK Series

CK 146

144 l/m
38.1 USGPM

max 60 BAR
870 P.S.I.

APPLICAZIONI - APPLICATIONS

- **ATOMIZZATORI** ATOMIZERS
- **CLEANING** CLEANING

SPECIAL TRADEMARK

- El — EASYlube™
- Is — INTELLIseal™
- Sc — SMARTcase™

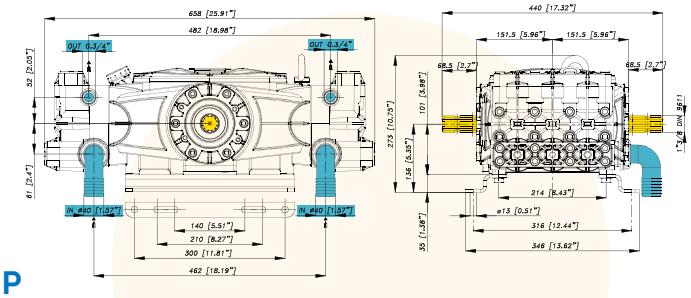

P

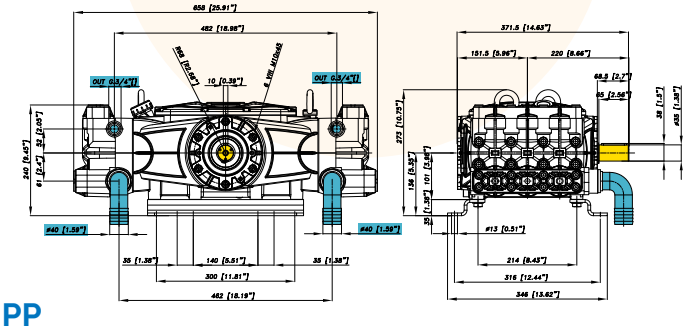

PP

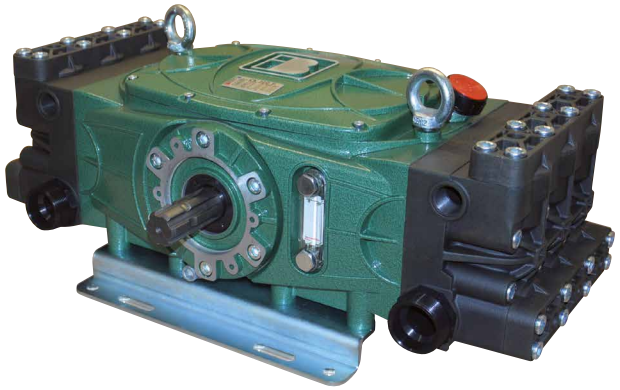

CARATTERISTICHE TECNICHE SPECIFICATIONS	550 g/min. 550 R.P.M.	
Potenza - Power	**16,6 KW**	22.2 HP
Peso - Weight	**39 Kg**	85.8 lb
IN	**2x40 mm**	1"9/16 in
Pressione Min - Min Pressure	**-0,15 BAR**	- 2,17 P.S.I.
	-0.3 BAR (servizio discontinuo)	-0.435 P.S.I. (discontinuous service)
Pressione Max - Max Pressure	**1 BAR**	14.5 P.S.I.
OUT	**G. 3/4**	
Max. Temperatura - Max. Temperature	**60 °C**	140 °F
Tipo olio - Oil type	**SAE 30**	
Capacità olio - Oil capacity	**2,8 lt**	0.74 U.S.G.

TABELLA RENDIMENTI
PERFORMANCE CHART

g/min R.P.M.	400		450		500		550	
BAR P.S.I.	**L/min** USGPM	**KW** HP	**L/min** USGPM	**KW** HP	**L/min** USGPM	**KW** HP	**L/min** USGPM	**KW** HP
2 29	**103,1** 27,2	**0,4** 0,5	**113,4** 30,0	**0,4** 0,6	**123,7** 32,7	**0,5** 0,6	**144,3** 38,1	**0,6** 0,8
20 290	**102,1** 27,0	**4,0** 5,4	**112,4** 29,7	**4,4** 5,9	**122,6** 32,4	**4,8** 6,4	**143,0** 37,8	**5,6** 7,5
40 580	**101,4** 26,8	**8,0** 10,6	**111,6** 29,5	**8,8** 11,7	**121,7** 32,2	**9,6** 12,8	**142,0** 37,5	**11,2** 14,9
60 870	**100,7** 26,6	**11,9** 15,9	**110,8** 29,3	**13,1** 17,4	**120,9** 31,9	**14,2** 19,0	**141,0** 37,3	**16,6** 22,2

Versioni
Versions

76.7310.97.3 - P		76.7311.97.3 - PP
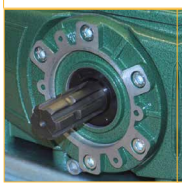		
Anteriore/Front	**Posteriore**/Rear	**Anteriore**/Front