DAVEY

ISO spec®

CF Series
ISO2858 Heavy Duty
Industrial Centrifugal Pump

Installation and Operating Instructions

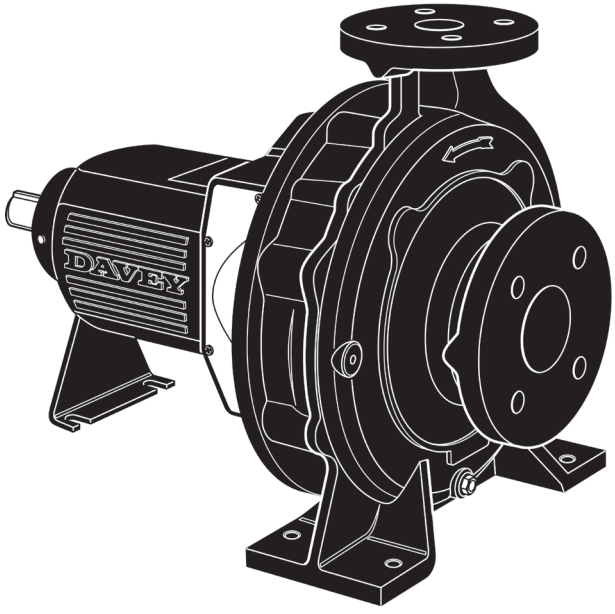

PLEASE READ IMPORTANT CAREFULLY

Please pass these instructions on to the operator of this equipment.

Introduction

Thank you for purchasing a quality Davey product. It is our commitment to satisfy our customers by offering our very best service.

This manual contains instruction for installation, operation and maintenance of ISOspec® CF bareshaft, single stage, non-self priming, centrifugal pumps. Therefore, please read it carefully before use to obtain a long satisfying service life of the purchased unit.

Davey ISOspec® CF bareshaft centrifugal pumps are designed with high efficiency and low maintenance features.

Specifications

Model designation (example) :-

CF 200×150-500

- Nominal dia. of impeller (mm)
- Dia. of outlet (mm)
- Dia. of inlet (mm)
- Series code of pump

Inspection of Pump

Always check on receipt of delivery you have received the correct pump unit. To identify, see above specifications and label below. Check correct motor kW & speed on motor nameplate (attached to motor) prior to installation.



Driving Options

Your ISOspec® pump can be driven by a variety of means. The best option is to direct drive via a suitable coupling. If you must belt drive your ISOspec® pump, lower speed (rpm). Limits may apply - see below:

Pump Size	Direct	Belt
50x32-160	3600	2900
65x50-160	3600	2900
80x65-160	3600	2900
100x80-160	3600	2850
50x32-200	3600	2900
65x40-200	3600	2900
80x50-200	3600	2900
100x65-200	3600	2250
125x100-200	3600	2060
65x40-250	3600	2480
80x50-250	3600	2050
100x65-250	3600	2180
125x100-250	3000	1620
150x125-250	2350	1440
65x40-315	3000	1800
80x50-315	3000	1800
100x65-315	3000	1450
125x100-315	3000	1380
150x125-315	2350	1420
200x150-315	1800	1150
250x200-315	1800	920
125x80-400	2350	1450
125x100-400	2350	1240
150x125-400	2350	1060
200x150-400	1800	920
125x100-500	1800	1240
150x125-500	1800	1060
200x150-500	1800	920
250x200-400	1800	920

Installation Location

It is important to select a site as close to the liquid source as possible. When a suction lift is unavoidable, install the pump as near to the water level as possible (see suction piping). You should always check the maximum permissible lift of the pump from its performance curve.

Foundations

The pump unit should be mounted on a foundation that is substantial enough to withstand the weight of the unit & large enough to accommodate all mounting feet so they can be securely fixed to avoid movement.

Suction Piping

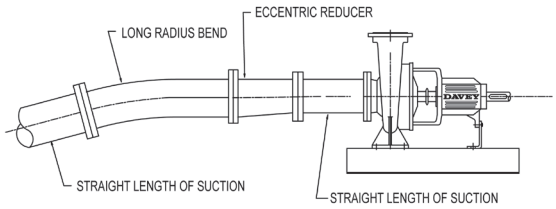

PREFERRED ARRANGEMENT FOR SUCTION LIFTS

All fittings & suction piping should be free of air leaks.

When a suction lift or long suction lengths are unavoidable, consideration should be given to over sizing the suction line to reduce suction losses. On suction lifts a foot valve will be required, sized equal to the suction line size. For applications on creek beds or dams, please install a foot valve & strainer, well submerged below the surface, to reduce whirlpools & air inclusion. Air inclusion can result in cavitation reducing the pump performance & eventually destroying the pump or its components.

Long radius bends should be installed & a straight length of piping equal to 2.5, the impeller diameter, should be observed. Supporters should be equipped to the inlet pipeline and outlet pipeline to avoid the pump flange bearing too much tension force.

Discharge Piping

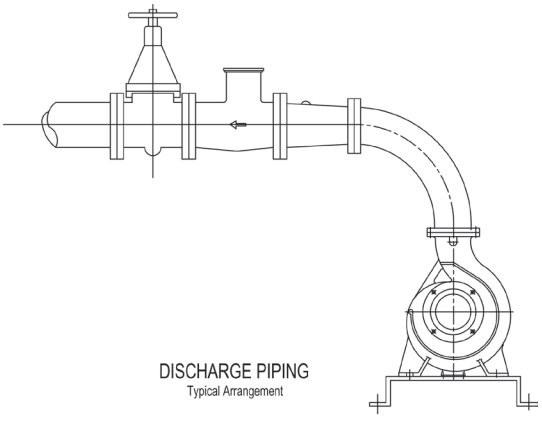

Discharge piping must be selected of a size that would equal the discharge of the pump. For long discharge lengths, consideration should be given to oversize to minimize discharge losses reducing flow.

Talk to your nearest Davey dealer to calculate all system losses. To avoid air pockets in discharge lines at high points, vent cocks may be required to release air blocks accumulated within the system. Air pockets may affect the performance of the pump. A throttling valve should be installed in the discharge line to ensure the pump works within the performance curve.

Starting

Caution: Do not attempt to run pump if it has not been filled with water (primed). Severe damage will result to shaft seal.

1) Ensure the suction line & pump casing is full of water open suction valve if fitted.
2) Check power is off & rotate the pump shaft slowly to release any trapped air within the pump casing.
3) Close the discharge valve.
4) Check the direction of rotation on the pump casing or motor cover.
5) If this is correct you may now start the pump, when it reaches full speed you will see the pressure in the discharge line rise. Slowly open the discharge valve until the pump adjusts to maintain its duty point.

Structural Representation

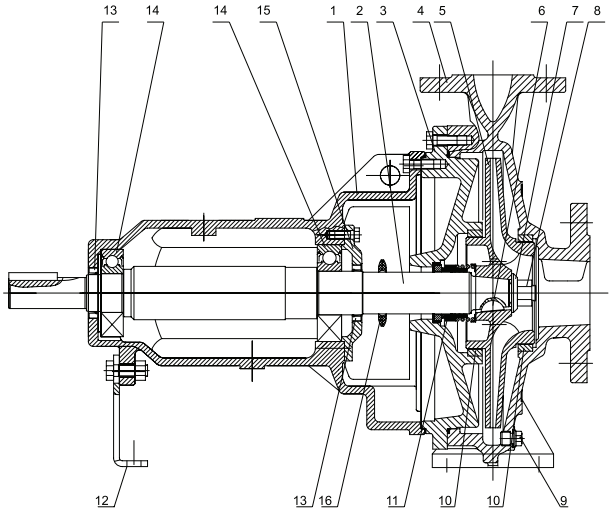

1. Bearing housing
2. Shaft
3. Rear casing cover
4. Pump casing
5. Impeller
6. Impeller key
7. Impeller washer
8. Impeller nut
9. Volute drain plug
10. Bronze wear ring
11. Mechanical shaft seal
12. Bearing housing foot
13. Bearing lip seal
14. Bearing
15. Bearing cap
16. Water slinger

In accordance with AS 3350.2.41 we are obliged to inform you that this pump is not to be used by children or infirm persons and must not be used as a toy by children.

Trouble Shooting

Pump is running but failing to deliver water or desired pressure.

1) ⚠ Turn the unit off.
2) Check suction line is free of debris or blockages & check that the pump has not lost its prime. If so, remove blockage & repeat Starting at step 1).
3) Check that the suction valve is open.
4) Check that the discharge valve is open.
5) Check for air leaks. These may not always be visible to the naked eye unless pressure is applied to the suction line.
6) Check that the suction line is not too long.
7) Is suction line to pump excessive?
8) Is the foot valve stuck open or undersized?
9) Is speed too slow?
10) Check motor direction rotation.
11) Check for possible clogging in impeller vanes
12) Is the discharge piping undersized for applications.

Excessive Vibration

1) ⚠ Turn unit off
2) Check motor is rotating in correct direction
3) Check both motor feet & pump feet are secured properly.
4) Check coupling rubbers are not worn
5) Check drive couplings are secured tightly to the pump & drive shafts.
6) Check pump & motor bearings are OK
7) If so, alignment will need to be performed
8) Impeller could be partially blocked causing imbalance

Noisy Operation

1) ⚠ Turn unit off
2) Check pump or motor bearings
3) Check pump is primed
4) Check suction line is not damaged causing insufficient supply & resulting in cavitation
5) Check you are not pumping solids

High Power Consumption

1) Check direction of rotation
2) Check operating speed on the motor matches the intended performance curve speed.
3) Check that the estimated head is correct as pump may be running down on its curve producing high flow but drawing more power. Throttle the pump back on to its curve via discharge gate valve or reduce impeller diameter.
4) The Specific Gravity or Density of the liquid is greater than 1kg/litre affecting power draw.
5) Check impeller diameter for the correct size to establish maximum power requirement at duty point.

Lubrication

Pump bearings are greased for life.

Motor bearings refer to Motor manufacturers recommendations.

Davey Warranty

Davey Water Products Pty Ltd (Davey) warrants all products sold will be (under normal use and service) free of defects in material and workmanship for a minimum period of one (1) year from the date of original purchase by the customer as marked on the invoice, for specific warranty periods for all Davey products visit daveywater.com.

This warranty does not cover normal wear and tear or apply to a product that has:

- been subject to misuse, neglect, negligence, damage or accident
- been used, operated or maintained other than in accordance with Davey's instructions
- not been installed in accordance with the Installation Instructions or by suitably qualified personnel
- been modified or altered from original specifications or in any way not approved by Davey
- had repairs attempted or made by other than Davey or its authorised dealers
- been subject to abnormal conditions such as incorrect voltage supply, lightning or high voltage spikes, or damages from electrolytic action, cavitation, sand, corrosive, saline or abrasive liquids,

The Davey warranty does not cover replacement of any product consumables or defects in products and components that have been supplied to Davey by third parties (however Davey will provide reasonable assistance to obtain the benefit of any third-party warranty).

To make a warranty claim:

- If the product is suspected of being defective, stop using it and contact the original place of purchase. Alternatively, phone Davey Customer Service or send a letter to Davey as per the contact details below
- Provide evidence or proof of date of original purchase
- If requested, return the product and/or provide further information with respect to the claim. Returning the product to the place of purchase is at your cost and is your responsibility.
- The warranty claim will be assessed by Davey on the basis of their product knowledge and reasonable judgement and will be accepted if:
  - a relevant defect is found
  - the warranty claim is made during the relevant warranty period; and
  - none of the excluded conditions listed above apply
- The customer will be notified of the warranty decision in writing and if found to be invalid the customer must organise collection of the product at their expense or authorise its disposal.

If the claim is found to be valid Davey will, at its option, repair or replace the product free of charge.

The Davey warranty is in addition to rights provided by local consumer law. You are entitled to a replacement or refund for a major failure and compensation for any other reasonably foreseeable loss or damage. You are also entitled to have the goods repaired or replaced if the goods fail to be of acceptable quality and the failure does not amount to a major failure.

For any internet connected products the consumer is responsible for ensuring a stable internet connection. In the event of a network failure the consumer will need to address the concern with the service provider. Use of an App is not a substitute for the User's own vigilance in ensuring the product is working to expectation. Use of a Smart Product App is at the User's own risk. To the fullest extent permitted by law Davey disclaims any warranties regarding the accuracy, completeness or reliability of App data. Davey is not responsible for any direct or indirect loss, damage or costs to the User arising from its reliance on internet connectivity. The User indemnifies Davey against any claims or legal actions from them or others relying on internet connectivity or App data may bring in this regard.

Products presented for repair may be replaced by refurbished products of the same type rather than being repaired. Refurbished parts may be used to repair the products. The repair of your products may result in the loss of any user-generated data. Please ensure that you have made a copy of any data saved on your products.

To the fullest extent permitted by law or statute, Davey shall not be liable for any loss of profits or any consequential, indirect or special loss, damage or injury of any kind whatsoever arising directly or indirectly from Davey products. This limitation does not apply to any liability of Davey for failure to comply with a consumer guarantee applicable to your Davey product under local laws and does not affect any rights or remedies that may be available to you under local laws.

For a complete list of Davey Dealers visit our website (daveywater.com) or call:

DAVEY

Davey Water Products Pty Ltd
Member of the GUD Group
ABN 18 066 327 517

daveywater.com

AUSTRALIA

Head Office
6 Lakeview Drive,
Scoresby, Australia 3179
Ph: 1300 232 839
Fax: 1300 369 119
Email: sales@davey.com.au

NEW ZEALAND

7 Rockridge Avenue,
Penrose, Auckland 1061
Ph: 0800 654 333
Fax: 0800 654 334
Email: sales@dwp.co.nz

EUROPE

7 rue Eugène Hénaff 69200
Vénissieux, France
Ph: +33 (0) 4 72 13 95 07
Fax: +33 (0) 4 72 33 64 57
Email: info@daveyeurope.eu

NORTH AMERICA

Ph: 1-888-755-8654
Email: info@daveyusa.com

MIDDLE EAST

Ph: +971 50 6368764
Fax: +971 6 5730472
Email: info@daveyuae.com

® Davey is a trademark of Davey Water Products Pty Ltd. © Davey Water Products Pty Ltd 2023.

P/N 49719-6

*** Installation and operating instructions are included with the product when purchased new. They may also be found on our website.**