

DAVEY

DAVEY Dynaflo®

Model Numbers:
CD40-40, CD40-55,
CD40-75 & CD50-110

GUARANTEE
1 YEAR

APPLICATIONS

Pumping of clean, non-aggressive liquids, free of fibres in suspension, suitable for water supply, agricultural and industrial applications such as tank filling, irrigation and hosing down dairies, factory floors etc.

TRANSFER PUMP

FEATURES & BENEFITS

- **Total heads to 55m and flow to 1100 lpm**
- **End suction single stage centrifugal pump**
  – Close coupled
  – Compact design
  – Ease of installation
- **Cast iron hydraulics**
  – Long service life
  – Resistant to abrasion
- **Casing flanges**
  – Conform to Din 2532
  – BSP threaded counter flanges
- **High efficiency design**
  – Lower operating costs
  – Centre line mount
  – Back pullout
  – Quiet smooth operation
- **Mechanical shaft seal**
  – Carbon vs Ceramic
  – Easy to replace
  – Low cost

Transfer Pumps

DAVEY

OPERATING LIMITS	
Capacities to	1,100 lpm (66m³/hr)
Pressure heads to	55m
Temperature range	1°C - 90°C
Inlet size	65mm
Outlet size	40mm
Maximum casing pressure	100mm
Power	400V ± 10%
Protection	IP55
Insulation class	F

MATERIALS OF CONSTRUCTION	
PART	MATERIAL
Impellers	Cast iron G25
Pump casing	Cast iron G25
Seal ring (stationary)	Ceramic
Seal ring (rotating)	Carbon
Seal elastomer	Nitrile rubber
O-rings	Nitrile rubber
Pump shaft	304 stainless steel

ELECTRICAL DATA				
Model	CD40-40	CD40-55	CD40-75	CD50-110
Supply voltage	380-415			
Phase	Three			
Supply frequency	50Hz			
Full load current	9.4A	11.5A	15A	22A
Locked rotor current	75A	95A	135A	195A
Output Power	4.0kW	5.5kW	7.5kW	11kW
Enclosure	IP55			
Insulation class	F			

INSTALLATION AND PRIMING

- Installation with suction lift require a good quality foot valve to avoid loss of prime.
- To prime, fill pump body and suction line through priming plug hole located above suction inlet and replace plug.

HYDRAULIC PERFORMANCE

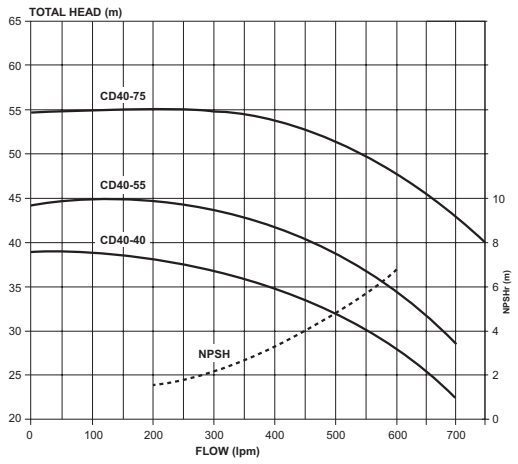

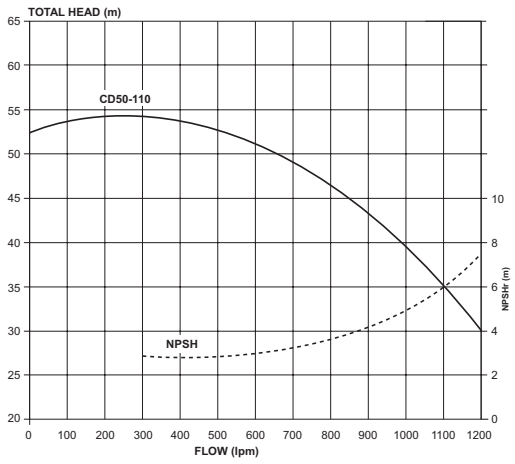

DIMENSIONS (mm)											
Model	A	B	C	D	E	F	G	Mounting Holes Diameter	Inlet BSP	Outlet BSP	Net Weight (kg)
CD40-40	292	463	242	132	50	80	190	14	65	40	52
CD40-55	340	515	278	160	50	100	212	14	65	40	71
CD40-75	340	557	278	160	50	100	212	14	65	40	84.5
CD50-110	360	600	290	160	50	100	212	14	65	50	99.5

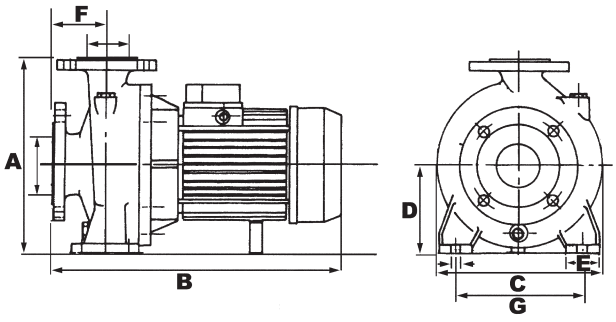

H/O & MFG SCORESBY
Certified System Quality ISO 9001
Certified System Environment ISO 14001

daveywater.com

This literature is not a complete guide to product usage. All images provided in this document are for illustration purposes only. Further information is available from your Davey Dealer, Davey Support Centre and from the relevant product Installation and Operating Instructions. Must be read in conjunction with the relevant product Installation and Operating Instructions and all applicable statutory requirements. Product specifications may change without notice. ® Davey is a registered trademark of Davey Water Products Pty Ltd. © Davey Water Products Pty Ltd 2024.

DAVEY

DWP0496-2/0424