GENERAL PUMP *A member of the Interpump Group*

CBC Series

Single impeller, cast iron centrifugal water pumps

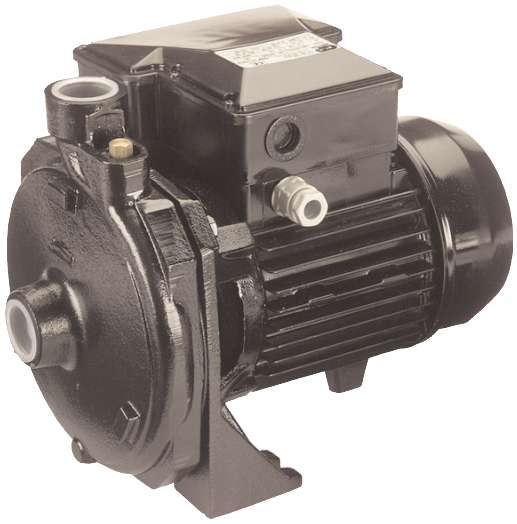

FEATURES

- Heavy duty cast-iron construction
- Balanced brass impeller
- Efficient graphite and ceramic mechanical seal
- Buna-N elastomers for exceptional compatibilty
- Large NPT-F ports
- Priming port

SPECIFICATIONS

Part Number	Inlet	Outlet	Impeller	Horse Power	RPM	Volts	Max psi	Max Temp °F(°C)	Mechanical Seal	Impeller Material	Body Material
CBC1101511	1"	1"	5 13/16"	1.5 HP	3450	110	130	158(70)	Graphite/Ceramic	Brass	Cast Iron
CBC1102231	1"	1"	6 3/8"	2.2 HP	3450	230	130	158(70)	Graphite/Ceramic	Brass	Cast Iron
CBC1103031	1"	1"	7"	3.0 HP	3450	230	130	158(70)	Graphite/Ceramic	Brass	Cast Iron

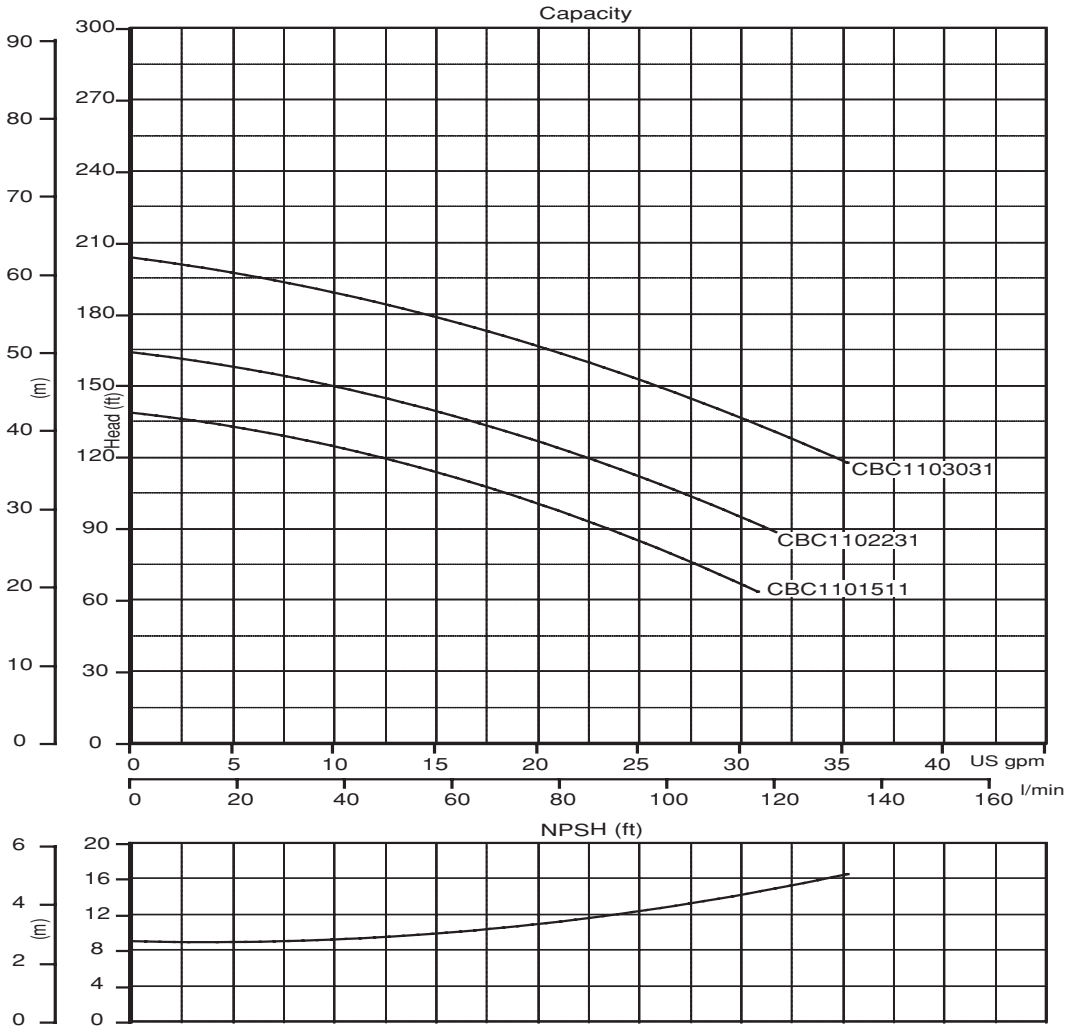

GP CENTRIFUGALS

CBC Series

GENERAL PUMP *A member of the Interpump Group*

Single impeller, cast iron centrifugal water pumps

PARTS LIST

Item	Part No.	Description	Qty
5.	W51010051	Pump Body, Cast Iron	1
8.	W57002002	Drain Plug, Brass	1
9.	W57540204	Drain Gasket, Aluminum	1
10.	W57411005	Impellar Nut, Brass	1
12.	W51300225	Impeller, Brass, CBC1101511	1
	W51300245	Impeller, Brass	
13.	W54250140	Rotating Mechanical Seal, Graphite	1
14.	W54730640	O-ring	1
15.	W54200120	Fixed Mechanical Seal, Ceramic	1
17.	W54300120	Deflector	1
18.	W53200120	Flange, Aluminum	1
19.	W57002520	Screw	4
20.	W53400140	Rear Bearing	1
20a.	W53400220	Front Bearing	1
21.	W57800609	Key, 304 SS	1
22.	W50101500	Pump & Motor Shaft, CBC1101511	1
	W50101600	Pump & Motor Shaft, CBC1102231	
	W50101625	Pump & Motor Shaft, CBC1103031	
24.	W56800080	Circlip	1
25.	W50001141	Motor Casing w/ Stator, CBC1101511	1
	W50001528	Motor Casing w/ Stator, CBC1102231	
	W50001602	Motor Casing w/ Stator, CBC1103031	
26.	W55300240	Foot, Plastic	1
27.	W57100351	Tie-Rod	4
	W57100350	Tie-Rod, CBC1103031	
29.	W55130030	Terminal Board Cover	1
	W55120080	Terminal Board Cover, CBC1103031	
30.	W55100305	Terminal Board	1
31.	W55170202	Strain Relief	1
32.	W53220060	Rear Motor Cover, Aluminum	1
	W53220062	Rear Motor Cover, CBC1103031	
33.	W55000080	Motor Fan, Plastic	1
35.	W55050080	Fan Cover	1
52.	W55500440	Capacitor, CBC1101511	1
	W55500343	Capacitor, CBC1102231	
	W55500380	Capacitor, CBC1103031	

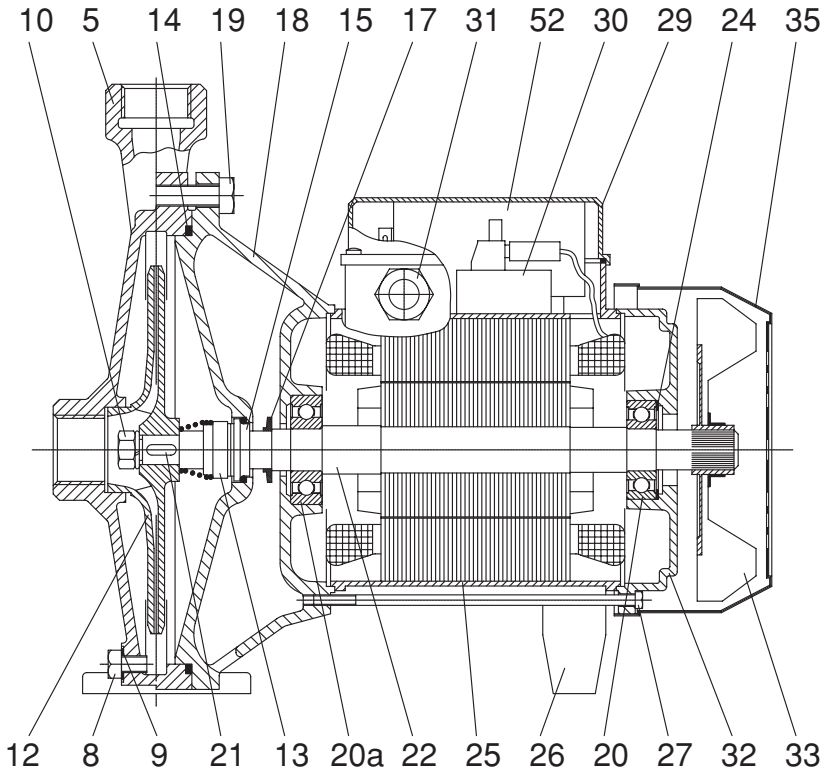

DIMENSIONS

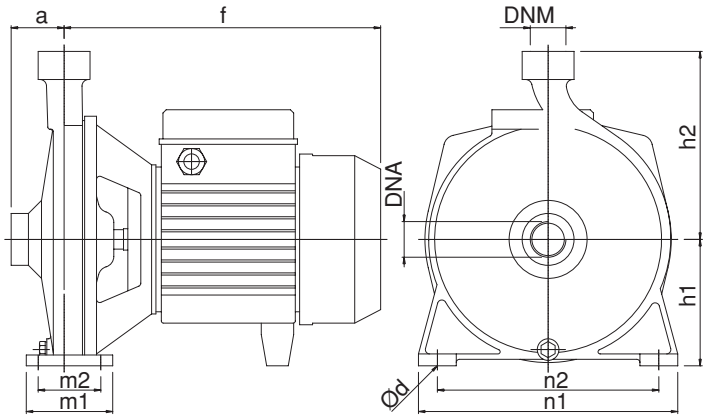

in (mm)	DNA	DNM	f	a	m1	m2	n1	n2	h1	h2	Ød	lb(kg)
CBC1101511	1	1	11.5 (293)	1.9 (49)	3.1 (80)	2.3 (58)	9.4 (240)	8.1 (205)	4.6 (116)	6.9 (174)	0.4 (11)	48.9 (22)
CBC1102231	1	1	11.5 (293)	1.9 (49)	3.1 (80)	2.3 (58)	9.4. (240)	8.1 (205)	4.6 (116)	6.9 (174)	0.4 (11)	53.6 (24)
CBC1103031	1	1	11.5 (293)	1.9 (49)	3.1 (80)	2.3 (58)	9.4 (240)	8.1 (205)	4.6 (116)	6.9 (174)	0.4 (11)	59.5 (27)

GENERAL PUMP 1174 NORTHLAND DRIVE • MENDOTA HEIGHTS, MN 55120
PHONE: (651)454-6500 • FAX: (651)454-4524 • e-mail: sales@gpcompanies.com • www.generalpump.com

300357 Rev. B
7-02

GENERAL PUMP