BWTC 21/20 S

MAX FLOW	5.5 GPM / 21.0 L/MIN
MAX PRESSURE	2900 PSI / 200 BAR
RATED PUMP SPEED	1450 RPM
POWER REQUIREMENT	10.8 HP ELECTRIC
LUBRICATION	15.4 OZ UDOR LUBE

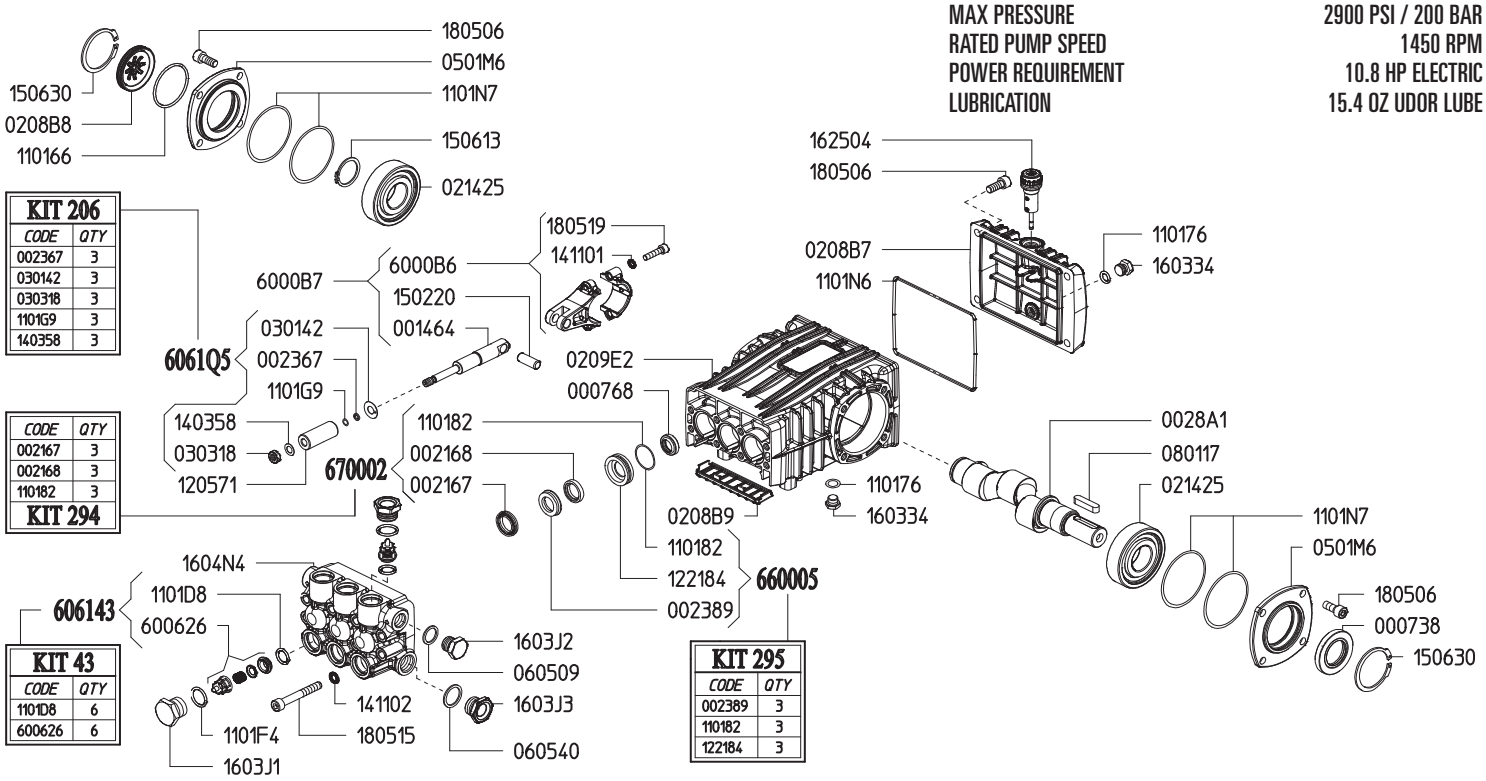

Revised 2-24-2022

Part #	Description	Qty
0007.18	OIL SEAL D15X24X5	3
0007.38	OIL SEAL D30	1
0014.64	PLUNGER GUIDE "B/BK"	3
0021.67	WATER SEAL HP D18 [B]	3
0021.68	WATER SEAL LP D18 [B]	3
0023.67	RING D5.2X8X1.3[C]	3
0023.89	UPPER RING D18 "B/BK" [D]	3
0028.A1	MALE SHAFT "B/BK" D24	1
0208.B7	BACK COVER "B/BK"	1
0208.B8	OIL SIGHT GLASS	1
0208.B9	COVER "B/BK"	1
0209.E2	CRANKCASE "B-X/BK-X"	1
0214.25	BALL BEARING D30	2
0301.42	SLINGER RING[C]	3
0303.18	NUT M8XH5[C]	3
0501.M6	BEARING FLANGE "B/BK"	2
0605.09	GASKET D17X23X1.5	1
0605.40	GASKET D21.5X27X1.5	1
0801.17	KEY A8X7X35	1
1101.66	O-RING - OIL SIGHT GLASS	1
1101.76	O-RING - PLUG	2
1101.82	O-RING - PRESSURE RING[B D]	3
1101.D8	O-RING - VALVE[A]	6
1101.F4	O-RING - VALVE FLUG	6
1101.G9	O-RING - PLUNGER ROD[C]	3
1101.N6	O-RING - BACK COVER	1
1101.N7	O-RING - BEARING FLANGE	4

Part #	Description	Qty
1205.71	CERAMIC PLUNGER D18 "B/BK"	3
1221.84	PRESSURE RING D18 "BWT" [D]	3
1403.58	WASHER D8[C]	3
1411.01	SERATED WASHER D6	6
1411.02	SERATED WASHER D8	8
1502.20	PIN D10X27	3
1506.13	SNAP RING D30	1
1506.30	SNAP RING D52	2
1603.34	PLUG G1/4	2
1603.J1	VALVE PLUG D15/18/20	6
1603.J2	PLUG G3/8	1
1603.J3	PLUG G1/2	1
1604.N4	HEAD "BWT"	1
1625.04	OIL PLUG G3/8	1
1805.06	ALLEN BOLT M8X20	12
1805.15	ALLEN BOLT M8X60	8
1805.19	ALLEN BOLT M6X25	6
6000.B6	ROD ASSEMBLY "B/BK"	3
6006.26	VALVE ASSEMBLY WITHOUT O-RING[A]	6
6061.43	KIT 43 - VALVE KIT "BWT"	1
6061.Q5	KIT 206 - PLUNGER KIT D15/18 "B/BK"	1
6600.05	KIT 295 - BRASS RING KIT D18 "B/BK"	1
6700.02	KIT 294 - WATER SEAL KIT	1

[A] Parts in 6061.43 (Kit 43).
[B] Parts in 6700.02 (Kit 294).
[C] Parts in 6061.Q5 (Kit 206).
[D] Parts in 6600.05 (Kit 295).

B SERIES DIMENSIONS

WEIGHT	20 LBS
LUBRICATION	15.4 OZ UDOR LUBE

Dimensional Drawings are Shown in Millimeters. To Convert to Inches, Multiply Dimension x 0.03937

B SERIES PUMPS - 24MM SOLID SHAFT

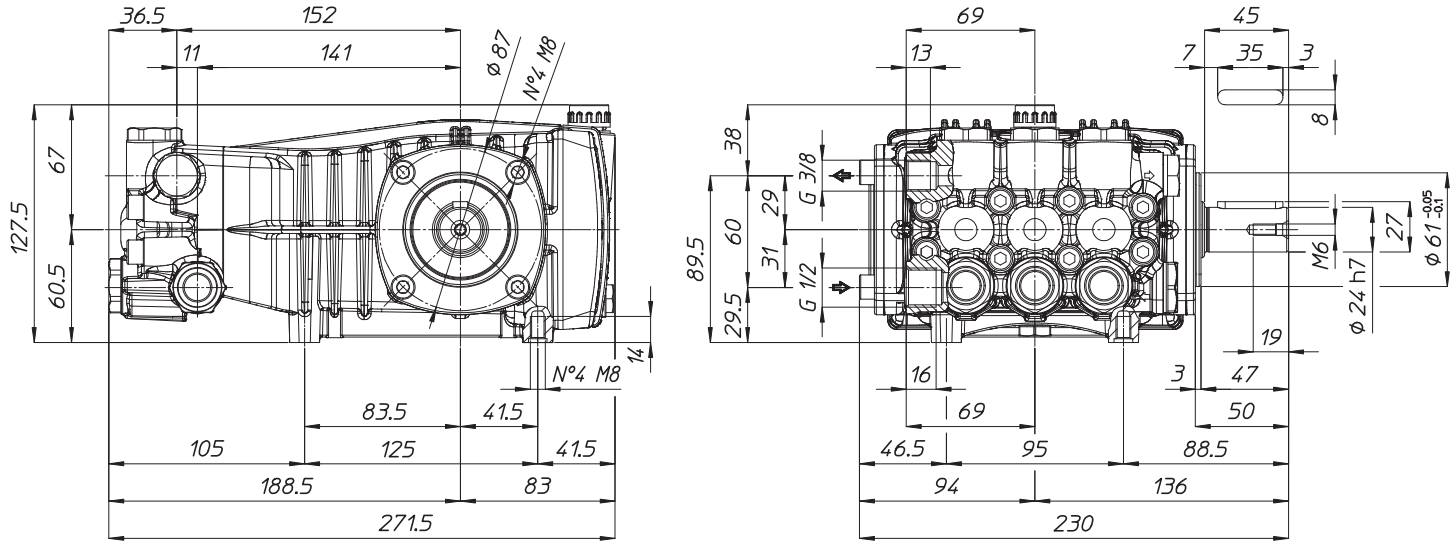

TORQUE SPECS

Ref.	Description	Ft./lb.	Nm	Loctite®
1	Head Bolts	19	25	-
2	Valve Caps	75	100	243
3	Inlet Cap	75	100	243
4	Outlet Cap	60	80	243
5	Bearing Flange Bolts	19	25	-
6	Rear Cover Bolts	19	25	-
7	Connecting Rod Bolts	9	11	243
8	Plunger Bolts	11	15	270
9	Valve Cover Bolts	-	-	-
10	Oil Drain Plug	19	25	-

