RIGID LANCE MACHINE

Automated Rigid Tube Lancing

TOOL TALK

StoneAge Rigid Lance Machines are the industry standard for both horizontal and vertical rigid lance cleaning of heat exchangers.

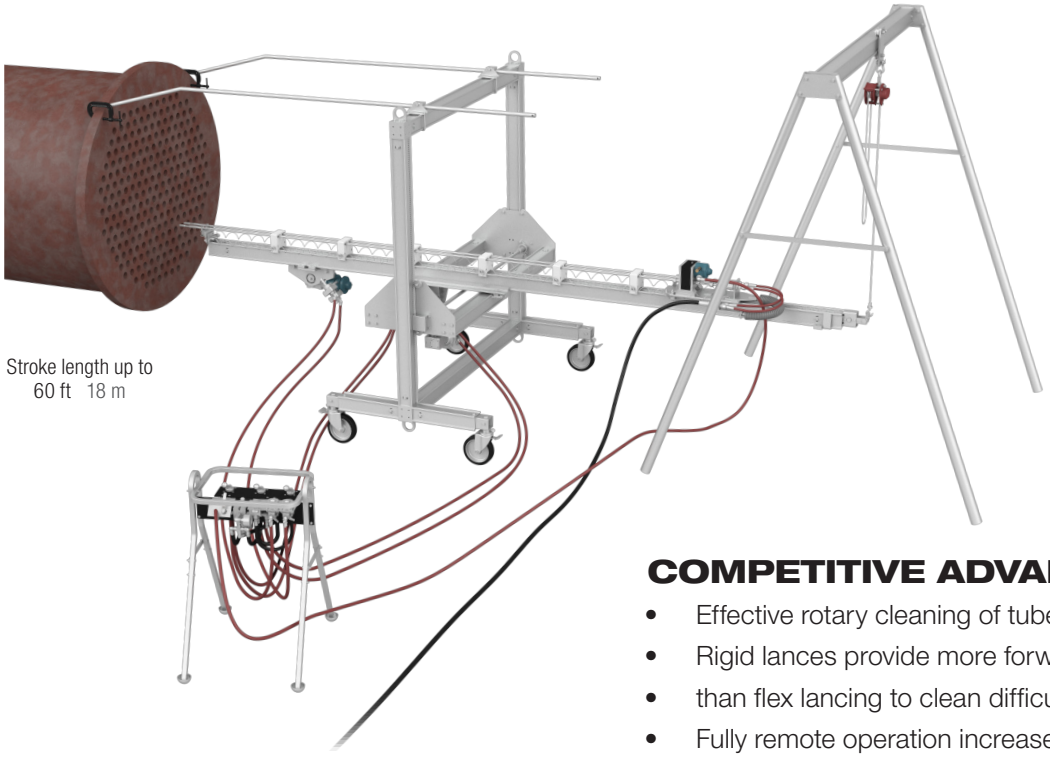

Stroke length up to
60 ft 18 m

COMPETITIVE ADVANTAGES

- Effective rotary cleaning of tube IDs
- Rigid lances provide more forward-hitting power
- than flex lancing to clean difficult deposits
- Fully remote operation increases safety by removing the operator from the splash-back area

FEATURES	BENEFITS
• Adjustable feed rate for lance travel	• Both directions of the lance can be regulated for speed to deliver appropriate cleaning
• Adjustable lance stops	• Forward stop to ensure complete tube coverage, optional retract stop to protect lances and operator
• Control box	• Control all movements of the complete package from up to 25 ft/8 m away
• Air or hydraulic drive	• Power source flexibility
• Expandable operating window	• Versatility for cleaning a variety of exchanger sizes
• Steering control and tilt function	• Positioner offers easy mobility and can be tilted to match the tube pitch angle of a bundle face

StoneAge
ENGINEERING THE POWER OF WATER

RIGID LANCE MACHINE OVERVIEW

CONSIDERATIONS

- What is the length and diameter of the tube IDs?
- What is the diameter of the heat exchanger/tube bundle?
- How many lances will be used?
- What is the operating pressure and flow?
- Is the power source air or hydraulic
- Is the exchanger horizontal or vertical? Is there sufficient space to accommodate the machine?

OTHER INFORMATION

- The lancing machine will sit directly in front of and in line with the bundle and will be longer than the tubes being cleaned. Please make sure to allow appropriate clearance at the face of the bundle.
- Standard fittings supplied by StoneAge may require adapters for metric threads.
- StoneAge does not typically sell lances or lance tips (nozzles).

TOOL SPECIFICATIONS

	BRLM 351	BRLM 361	BRLM 353-CS	BRLM 363-CS
Rotary Package	Dual	Dual	Triple	Triple
Maximum Pressure	15–22k psi 1000–1500 bar	44k psi 3000 bar	15–22k psi 1000–1500 bar	44k psi 3000 bar
Maximum Flow	60 gpm 227 l/min	60 gpm 227 l/min	60 gpm 227 l/min	60 gpm 227 l/min
Inlet Connection	3/4" MP	9/16" HP	3/4" MP	9/16" HP
Lance Connection	1/8" or 1/4" NPT, 3/8" or 9/16" MP	3/8" or 9/16" HP	1/8" or 1/4" NPT, 3/8" or 9/16" MP	3/8" or 9/16" HP
Rotation Speed	105-525 rpm	105-525 rpm	125-620 rpm	125-620 rpm
Maximum Rail Length	Up to 60 ft Up to 18 m	Up to 60 ft Up to 18 m	Up to 60 ft Up to 18 m	Up to 60 ft Up to 18 m
Feed Rate	0.3-1.2 ft/s 0.1-0.37 m/min	0.3-1.2 ft/s 0.1-0.37 m/min	0.3-1.2 ft/s 0.1-0.37 m/min	0.3-1.2 ft/s 0.1-0.37 m/min
Weight Complete	1200–1500 lb 544–680 kg	1200–1500 lb 544–680 kg	1200–1500 lb 544–680 kg	1200–1500 lb 544–680 kg
Maximum Water Temperature	160 °F 70 °C	160 °F 70 °C	160 °F 70 °C	160 °F 70 °C

Visit our website for tool resources including operation and maintenance videos:

WWW.STONEAGETOOLS.COM

RIGID LANCE MACHINE CONFIGURATION

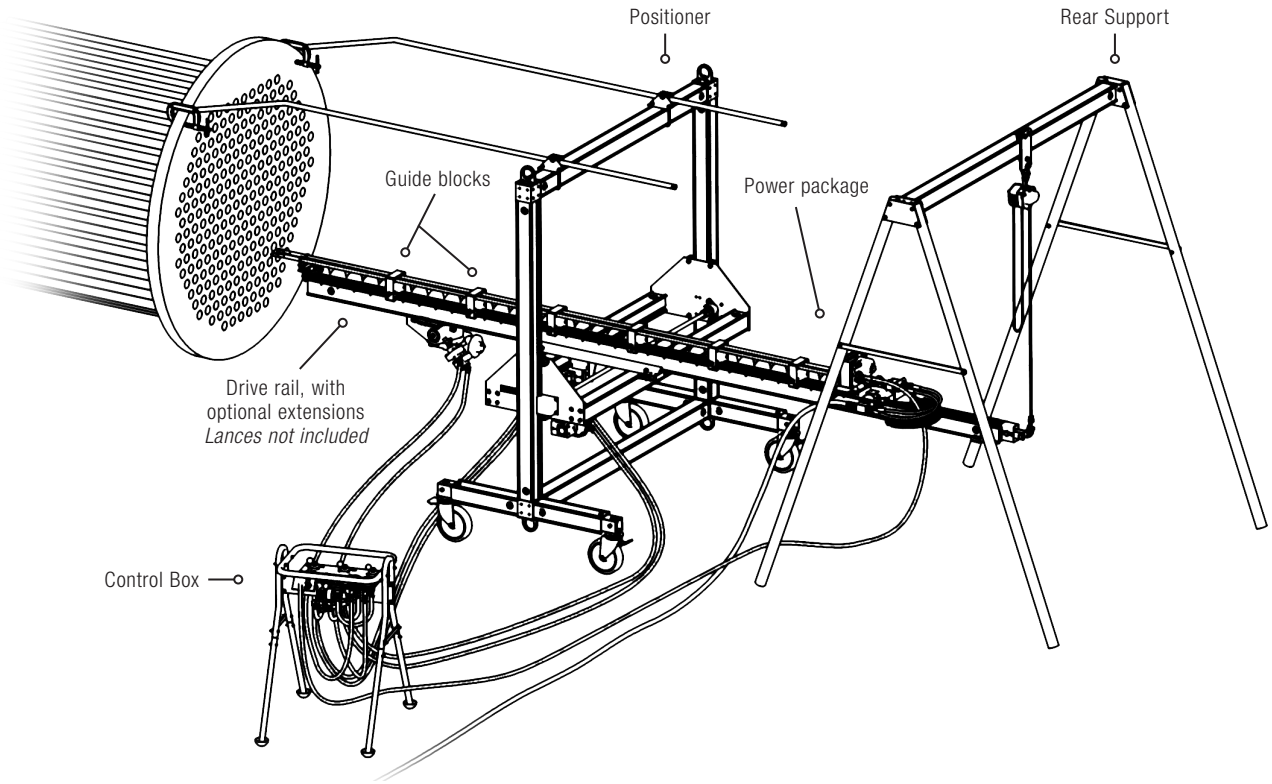

A complete Rigid Lance Machine configuration requires the following components:

1. Appropriate length of drive rail
2. Rotary package to drive up to 3 lances
3. Lance positioner and appropriate support options
4. Guide blocks
5. Control box

The following items may also be required:

- Drive rail extensions
- Lances and lance tips – not supplied
- Rear support for rail 25 feet and longer
- Mid support for rail 45 feet and longer

RIGID LANCE MACHINE CONFIGURATION

DUAL ROTARY PACKAGES

StoneAge offers preconfigured Rigid Lance Machine base packages that can be ordered in a single Part ID. Standard packages are preconfigured for the most common rail length of 25 feet/762 cm and come in 22k psi/1500 bar and 44k psi/3000 bar options.

Custom and non-rotary options are available by contacting StoneAge Customer Service.

22K PSI/1500 BAR PACKAGE **BRLM 351-MP-PKG**

QTY	DESCRIPTION	PART ID
1	Dual Rotary Pkg, Air, 22k psi	**BRLM 351**
1	1 Box Rail & Drive Pkg, Air - 15 ft	**BRLM 500-15**
1	1 Rail Ext Assy, 10 ft	**BRLM 580-10**
1	1 10' Ext Guideblock Kit, Dual 5/8"	**BRLM 636-10-D10**
1	1 15' Drive Guideblock Kit, Dual 5/8"	**BRLM 636-15D-D10**
1	1 Control Box, Lancing Positioner	**CB-LP**
1	1 Rear Support, Heavy Duty	**LP 320**
1	1 Wheel Assy Kit, Set (4)	**LP 335-WJE**
1	1 Lance Positioner w/Dice Corners	**LP-300-78**

44K PSI/3000 BAR PACKAGE **BRLM 361-HP-PKG**

QTY	DESCRIPTION	PART ID
1	Dual Rotary Pkg, Air, 44k psi	**BRLM 361**
1	1 Box Rail & Drive Pkg, Air - 15 ft	**BRLM 500-15**
1	1 Rail Ext Assy, 10 ft	**BRLM 580-10**
1	1 10' Ext Guideblock Kit, Dual 5/8"	**BRLM 636-10-D10**
1	1 15' Drive Guideblock Kit, Dual 5/8"	**BRLM 636-15D-D10**
1	1 Control Box, Lancing Positioner	**CB-LP**
1	1 Rear Support, Heavy Duty	**LP 320**
1	1 Wheel Assy Kit, Set (4)	**LP 335-WJE**
1	1 Lance Positioner w/Dice Corners	**LP-300-78**

Conversion Kits

PART ID	DESCRIPTION
BRLM 355-CONV	Conversion Pkg, Dual - HP to MP
BRLM 365-CONV	Conversion Pkg, Dual - MP to HP

RIGID LANCE MACHINE CONFIGURATION

TRIPLE ROTARY PACKAGES

Standard triple-lance packages are preconfigured for the most common rail length of 25 feet/762 cm and come in 22k psi/1500 bar and 44k psi/3000 bar options.

Custom and non-rotary options are available by contacting StoneAge Customer Service.

22K PSI/1500 BAR PACKAGE **BRLM 353-MP-PKG**

QTY	DESCRIPTION	PART ID
1	Triple Rotary Pkg, Air, 22k psi	**BRLM 353-CS**
1	1 Box Rail & Drive Pkg, Air - 15 ft	**BRLM 500-15**
1	1 Rail Ext Assy, 10 ft BRLM	**BRLM 580-10**
1	1 10' Ext Guideblock Kit, Dual 5/8"	**BRLM 636-10-T10**
1	1 15' Drive Guideblock Kit, Dual 5/8"	**BRLM 636-15D-T10**
1	1 Control Box, Lancing Positioner	**CB-LP**
1	1 Rear Support, Heavy Duty	**LP 320**
1	1 Wheel Assy Kit, Set (4)	**LP 335-WJE**
1	1 Lance Positioner w/Dice Corners	**LP-300-78**

44K PSI/3000 BAR PACKAGE **BRLM 363-HP-PKG**

QTY	DESCRIPTION	PART ID
1	Triple Rotary Pkg, Air, 44k psi	**BRLM 363-CS**
1	1 Box Rail & Drive Pkg, Air - 15 ft	**BRLM 500-15**
1	1 Rail Ext Assy, 10 ft BRLM	**BRLM 580-10**
1	1 10' Ext Guideblock Kit, Dual 5/8" BRLM	**BRLM 636-10-T10**
1	1 15' Drive Guideblock Kit, Dual 5/8"	**BRLM 636-15D-T10**
1	1 Control Box, Lancing Positioner	**CB-LP**
1	1 Rear Support, Heavy Duty	**LP 320**
1	1 Wheel Assy Kit, Set (4)	**LP 335-WJE**
1	1 Lance Positioner w/Dice Corners	**LP-300-78**

Conversion Kits

PART ID	DESCRIPTION
BRLM 353-CONV	Conversion Kit, Triple - HP to MP
BRLM 363-CONV	Conversion Kit, Triple - MP to HP

RIGID LANCE MACHINE CONFIGURATION

PACKAGE OPTIONS

WHEEL OPTIONS

We offer wheet kit options on the positioner to allow for easy transport and placement. The jack option stabilizes the positioner and also helps align it with tube bundles that may not be square. Built-in extensions give a wider footprint and better stabilization.

PART ID	DESCRIPTION
LP 335-JE	Jack Assembly Kit, Set (4)
LP 335-WE	Wheel Assembly Kit, Set (4)

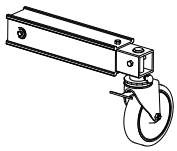

LP 335-WE
Swivel Wheel

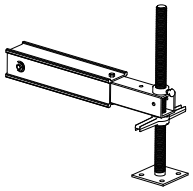

LP 335-JE
Jack Stand

RAIL OPTIONS

PART ID	DESCRIPTION
BRLM 580-05	Rail Ext Assy, 5 ft
BRLM 580-08	Rail Ext Assy, 8 ft
BRLM 580-10	Rail Ext Assy, 10 ft
BRLM 580-15	Rail Ext Assy, 15 ft

PLUGS AND GLANDS

PART ID	DESCRIPTION
AF 076-MP9	Plug, 9/16 MP
AF 070-MP9	Gland, 9/16 MP
AF 076-H9	Plug, 9/16 HP
AF 070-H9	Gland, 9/16 HP