BETA 240

6-Cylinder, High-Pressure Diaphragm Pumps with 4900.10 - VRG 160 Regulator

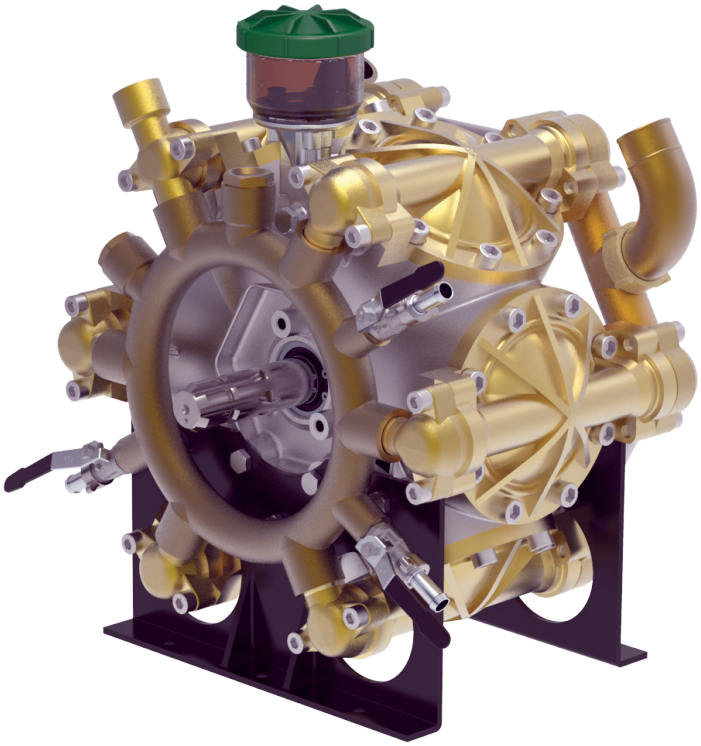

BETA 200 & 240 6-cylinder, high pressure, high volume diaphragm pumps are constructed of anodized aluminum, brass and stainless steel and have anodized aluminum, brass and stainless steel liquid handling parts. Includes mounting rails and 6005.08 control unit with pressure gauge. Simplicity of design and common parts allow for easy and economical maintenance.

BETA 200 & 240 pumps are excellent choices for various horticultural and agricultural spraying applications.

Model	GPM	l/min	PSI	bar	RPM	Drive Configuration	Weight
BETA 200 TS2C	56.0	218.0	725	50	550	1-3/8" 6-Spline Male PTO Thru-Shaft	200 LBS
BETA 240 TS2C	64.0	243.0	725	50	550	1-3/8" 6-Spline Male PTO Thru-Shaft	200 LBS

Specifications	BETA 240
Inlet Port	(2) 1-1/2" Hose Barb
Outlet Ports	(2) 1/2" Hose Barb, 3/4" NPT
Bypass	1-1/4" Hose Barb
Piston Diameter	75mm
Crankshaft Stroke/Code	19.0mm / U
Dimensions	16.1"L x 15.3"W x 19.7"H

Lubrication: Requires 170 oz. of Udor Lube 40W Premium Pump Oil.
Alternate Oil: 30W non-detergent or 15W-40 non-detergent oil.

Description	Part #
Diaphragm Kit (GREENTECH)	6062.C7
Diaphragm Bolt / Washer Kit	6062.64
Valve Kit	6062.E2
Regulator Repair Kit	8701.03
Complete Repair Kit	8700.55CK

UDOR USA
World Leader in Diaphragm and Plunger Pumps

6180 140th Avenue NW
Ramsey, MN 55303

Ph: 651-785-0666
Fax: 800-732-2670

www.udorusa.com
sales@udorusa.com

Scan this QR Code for More Information

BETA 240 TS2C

Maximum Flow	64.0 GPM / 243 lpm
Maximum Pressure	725 PSI / 50 bar
Maximum RPM	550 RPM
Inlet Port	(2) 1-1/2"Hose Barb
Outlet Ports	(2) 1/2" Hose Barb Valve, 3/4" FPT
Bypass	1-1/2" Hose Barb
Dimensions	16.1"L x 15.3"W x 19.7"H
Weight	200 lbs

Lubrication: Requires 160 oz. of Udor Lube 40W Premium Pump Oil.
Alternate Oil: 30W non-detergent or 15W-40 non-detergent oil.

8700.55CK ▼	
CODE	QTY
010201	6
030103	6
090362	6
110101	12
110177	1
6063E2	12

6062C7 KIT 631 ◆	
CODE	QTY
090362	6
110101	12

6062E2 KIT 644 ■	
CODE	QTY
110101	12
600697	12

606264 KIT 563 ●	
CODE	QTY
010201	6
030103	6

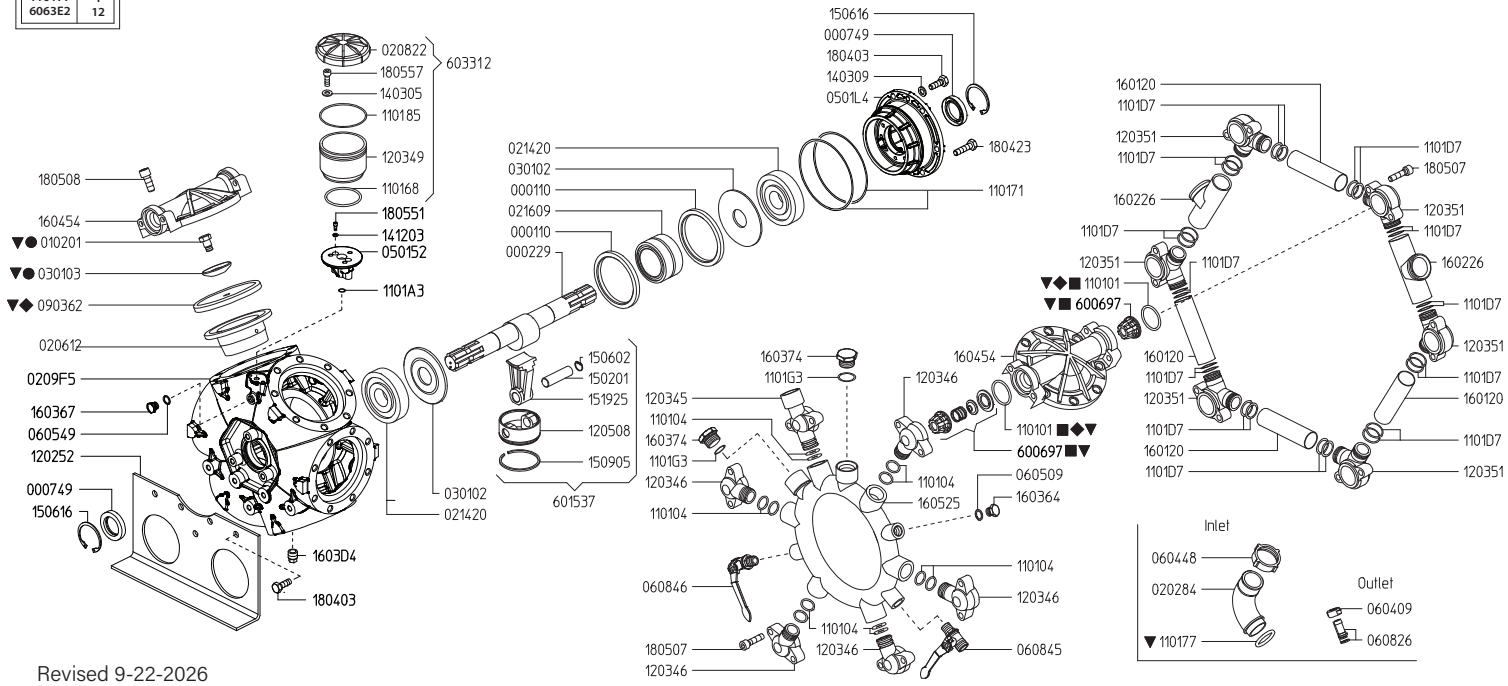

Revised 9-22-2026

Part #	Description	Qty
0001.10	RETAINER RING "ZETA 200/300/400"	2
0002.29	CRANKSHAFT TS 2C	1
0007.49	OIL SEAL D35	2
0102.01	DIAPHRAGM BOLT "ZETA/KAPPA 121" ●▼	6
0202.84	HOSE BARB D40	2
0206.12	SLEEVE D75	6
0208.22	OIL RESERVOIR COVER	1
0209.F5	CRANKCASE "BETA 200/240"	1
0214.20	BALL BEARING D35	2
0216.09	ROLLER BEARING D55	1
0301.02	ROD DISC "BETA/OMEGA"	2
0301.03	DIAPHRAGM DISC "BETA/OMEGA" ●▼	6
0501.52	OIL CUP SUPPORT FLANGE "BETA 200/240"	1
0501.L4	BUSHING FLANGE "BETA/OMEGA"	1
0604.09	BRASS NUT G1/2	3
0604.48	BRASS NUT M48X2	1
0605.09	GASKET D17	1
0605.49	GASKET D13	1
0608.26	HOSE BARB D13+GASKET	3
0608.45	BALL VALVE RIGHT	2
0608.46	BALL VALVE LEFT	1
0903.62	PISTON DIAPHRAGM GREENTECH 130MM ▼	6
1101.01	O-RING - VALVE ◆■▼	12
1101.04	O-RING - DISCHARGE ELBOWS	12
1101.68	O-RING - OIL RESERVOIR	1
1101.71	O-RING - BUSHING FLANGE	2
1101.77	O-RING - INLET HOSE BARB▼	2
1101.A3	O-RING - OIL CUP SUPPORT FLANGE	1
1101.85	O-RING - OIL RESERVOIR	1
1101.D7	O-RING - INLET ELBOWS / TUBES	24
1101.G3	O-RING - PLUG	2
1202.52	BASE PLATE "BETA 200/240"	2
1203.45	OUTLET ELBOW "BETA"	1
1203.46	OUTLET ELBOW "BETA"	5
1203.49	OIL RESERVOIR	1
1203.51	INLET ELBOW "BETA 200/240"	6

Part #	Description	Qty
1205.08	ALUMINIUN PISTON D75 "BETA/OMEGA/ZETA"	6
1403.05	WASHER M8	3
1403.09	WASHER M10	4
1412.03	BONDED WASHER D6.7	2
1502.01	PIN D18X64	6
1506.02	SNAP RING D18	6
1506.16	SNAP RING D55	2
1509.05	PISTON RING D75	6
1519.25	CONNECTING ROD "ZETA 350/400/BETA 200"	6
1601.20	SUCTION MANIFOLD "BETA 200/240"	4
1602.26	SUCTION MANIFOLD M48X2 "BETA 200/240"	2
1603.44	PLUG G3/8	1
1603.64	PLUG G3/8	1
1603.67	PLUG G1/4	1
1603.74	PLUG G3/4	2
1604.54	HEAD "BETA 110/150/200/240"	6
1605.25	OUTLET MANIFOLD "BETA 200/240"	1
1804.03	HEX BOLT M10X30	12
1804.23	HEX BOLT M10X40	2
1805.07	ALLEN BOLT M10X40	24
1805.08	ALLEN BOLT M12X30	48
1805.51	ALLEN BOLT M6X40	2
1805.57	ALLEN BOLT M8X22	3
6006.97	VALVE ASSEMBLY W/O O-RING ■▼	12
6015.37	ROD ASSEMBLY D75	6
6033.12	OIL RESERVOIR ASSEMBLY	1
6062.64	DIAPHRAGM BOLT / WASHER KIT (KIT 563)	1
6062.C7	DIAPHRAGM KIT GREENTECH 130MM (KIT 631)	1
6062.E2	IN/OUTLET VALVE KIT (KIT 644)	1
8700.55CK	COMPLETE REPAIR KIT	1

● Parts in 6062.64 (Kit 563)
◆ Parts in 6062.C7 (Kit 631)
■ Parts in 6062.E2 (Kit 644)
▼ Parts in 8700.55CK (Complete Repair Kit)

VRG 260 4900.10

Adjustable Pressure Regulator

Maximum Flow	66.0 GPM / 250 lpm
Maximum Pressure	1470 PSI /100 bar
Inlet Port	3/4" Male BSP
Outlet Ports	-
Bypass - Hose Barb	1-1/2" HB

606254	
KIT 553	
■	
CODE	QTY
090325	1
110101	1
110131	1
120413	1
150113	1
181001	1

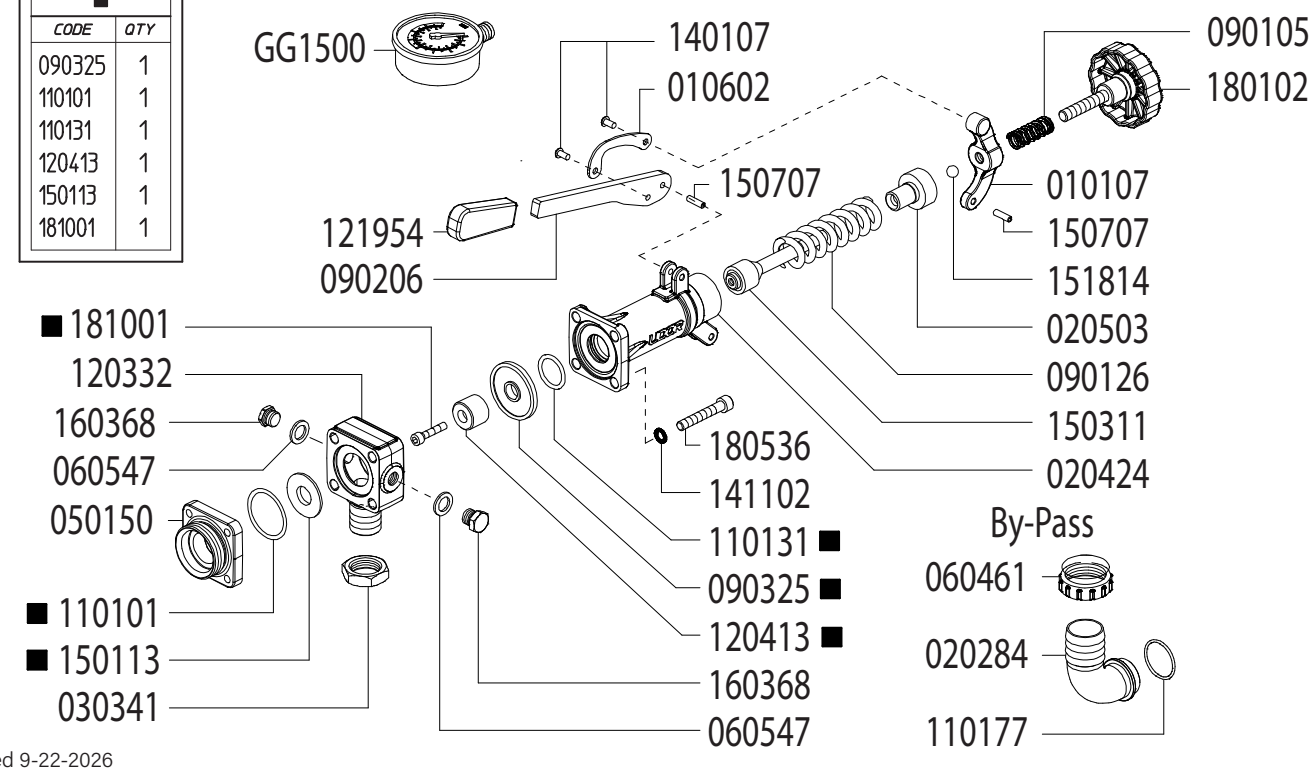

Revised 9-22-2026

Part #	Description	Qty
0101.07	LEVER GUIDE	1
0106.02	PRESSURE BAIL	1
0202.84	1-1/2" BRASS ELBOW HOSE BARB	1
0204.24	VALVE BODY	1
0205.03	VALVE CYLINDER	1
0303.41	NUT	1
0501.50	FLANGE	1
0604.61	BARB NUT	1
0605.47	GASKET D8	1
0901.05	SPRING	1
0901.26	SPRING	1
0902.06	HANDLE	1
0903.25	DIAPHRAGM	1
1101.01	O-RING - BYPASS FLANGE	1
1101.31	O-RING - VALVE BODY	1
1101.77	O-RING - BYPASS HOSE BARB	1
1203.32	INLET ELBOW - 3/4" MALE BSP	1

Part #	Description	Qty
1204.13	POPPET	1
1219.54	HANDLE COVER – RUBBER	1
1401.07	RIVET	2
1411.02	WASHER	4
150113	SEAT	1
1503.11	REGULATOR STEM	1
1507.07	PIN	2
1518.14	BALL	1
1603.68	PLUG - 1/4" BRASS	1
1801.02	ADJUSTMENT KNOB	1
1805.36	BOLT	4
1810.01	BOLT - STAINLESS STEEL	1
GG1500	HIGH PRESSURE GAUGE (OPTIONAL)	1
6062.54	REPAIR KIT (KIT 553)	

■ Parts Included in Repair Kit #6062.54 (KIT 553)

OPERATING INSTRUCTIONS

1. Before operating or re-operating pump, lift R.V. Handle (0902.05) so pump will start at zero pressure. **FAILURE TO DO SO WILL VOID PUMP WARRANTY**.
2. Turn Pressure Adjustment Knob (1801.02) counter-clockwise to relieve spring tension. (Step 2 is only necessary on initial start-up and is not necessary for daily operation.)
3. Start unit and let run until air is evacuated from system, when only liquid is expelled from the bypass line.
4. Return R.V. Handle (0902.05) to down position. Open spray gun or spray boom and turn adjustment knob (1801.02) clockwise until desired operating pressure is achieved.

BETA 200/240 DIMENSIONS

All Dimensions are WITHOUT Control Unit or Regulator

Dimensional Drawings are Shown in Millimeters. To Convert to Inches, Multiply Dimension x 0.03937

Specifications	BETA 200	BETA 240
Inlet Port - Hose Barb	(2) 1-1/2" HB	
Outlet Ports - Hose Barb	(2) 1/2" HB, 3/4" NPT	
Bypass - Hose Barb	1-1/4" HB	
Dimensions	16.1"L x 15.3"W x 19.7"H	
Diaphragm Material	GREENTECH (Standard)	

Lubrication: Requires 170 oz. of Udor Lube 40W Premium Pump Oil.
Alternate Oil: 30W non-detergent or 15W-40 non-detergent oil.

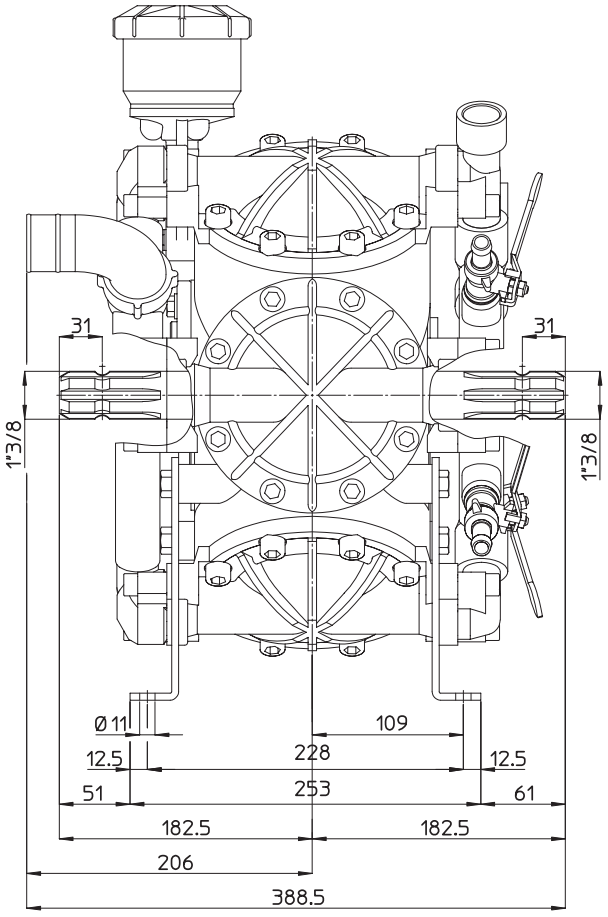

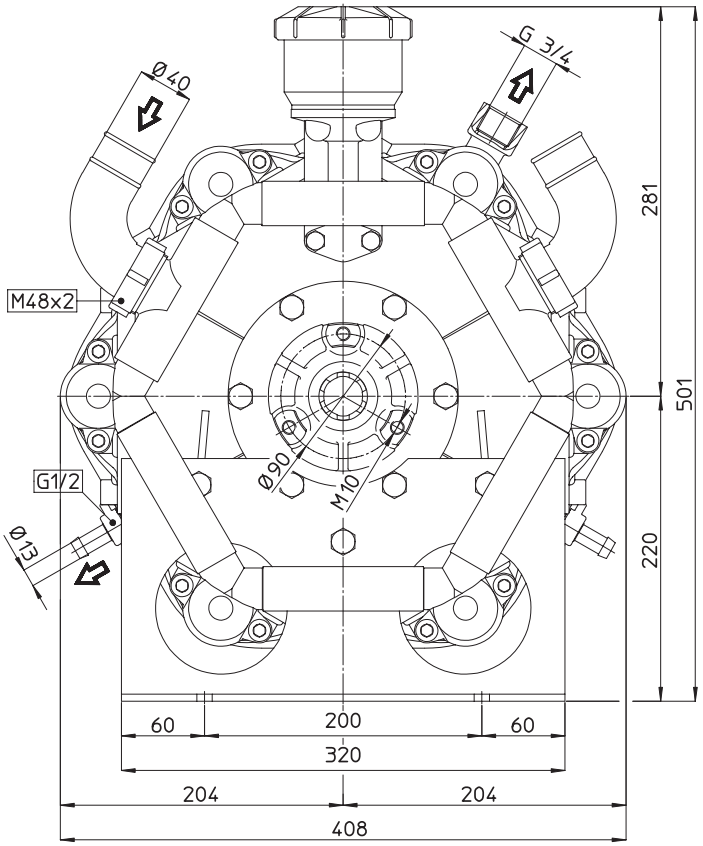

TORQUE SPECS

Ref.	Description	Ft./lb.	Nm
1	**Diaphragm Bolts** (Use Loctite 243)	22	30
2	**Head Bolts**	37	50
3	**Pulsation Dampener Bolts**	20	28
4	**Bearing Flange Bolts**	25	34
5	**Oil Cup Bolts**	7	10
6	**Manifold Bolts - Aluminum/Brass**	22	30

