BD SERIES

Solid Shaft Models

24mm Keyed Solid Shaft
1750 RPM



- **Brass Manifold**
- **Heat Treated Crankshaft**
- **Stainless Steel Piston Guides**
- **High Strength Aluminum Alloy Connecting Rods**
- **Industrial Quality Tapered Roller Bearings**
- **Solid Ceramic Plungers**
- **Stainless Steel Check Valves**
- **Heavy Duty Flat Base High Pressure Seals**
- **Replaceable PTFE Coated Body Guides**
- **15.4 oz. Capacity Vented Oil Bath Crank Case**
- **1/2" BSP-F Inlet. 3/8" BSP-F Outlet**
- **Max Fluid Temp, 160°F**

BD Series 24mm Keyed Solid Shaft Plunger Pumps

BD Series standard duty plunger pumps include a wide range of models with flow rates from 3.4 to 5.5 GPM and pressures up to 2900 PSI.

Other drive options include electric motor flange, gas engine flange, gas engine gear reduction and hydraulic motor flange.

Applications include general pressure cleaning, sewer jetting, vehicle wash equipment and fire fighting applications.

		Flow		*Pressure*		*Plunger*	*Crankshaft*					
	Model	*GPM*	*l/min*	*PSI*	*bar*	Dia.	*Stroke*	*Code*	*Power*	*Seal Kit*	*Valve Kit*	*Wt.*
1750 RPM	BD 4.0/20 S	4.1	15.0	2030	140	15mm	18.0mm	9	5.6 EBHP	6061.B2	6061.02	20 lbs
	BD 4.0/30 S	4.1	15.0	2900	200	15mm	18.0mm	9	7.9 EBHP	6061.B2	6061.02	20 lbs
	BD 5.0/30 S	4.8	18.2	2900	200	18mm	14.5mm	I	9.3 EBHP	6061.28	6061.02	20 lbs
	BD 6.0/30 S	6.0	22.7	2900	200	18mm	18.0mm	9	11.6 EBHP	6061.28	6061.02	20 lbs

NOTE: All pump models available with left-hand drive option. Add 'L' to model number when ordering (ex. BD 6.0/30 SL)

UDOR USA
World Leader in Diaphragm and Plunger Pumps

6180 140th Avenue NW
Ramsey, MN 55303

Ph: 651-785-0666
Fax: 800-732-2670

www.udorusa.com
sales@udorusa.com

Scan this QR Code for More Information

BD 5.0/30 S

MAX FLOW	4.8 GPM / 18.2 L/MIN
MAX PRESSURE	2900 PSI / 200 BAR
RATED PUMP SPEED	1750 RPM
POWER REQUIREMENT	9.3 HP ELECTRIC
LUBRICATION	15.4 OZ UDOR LUBE

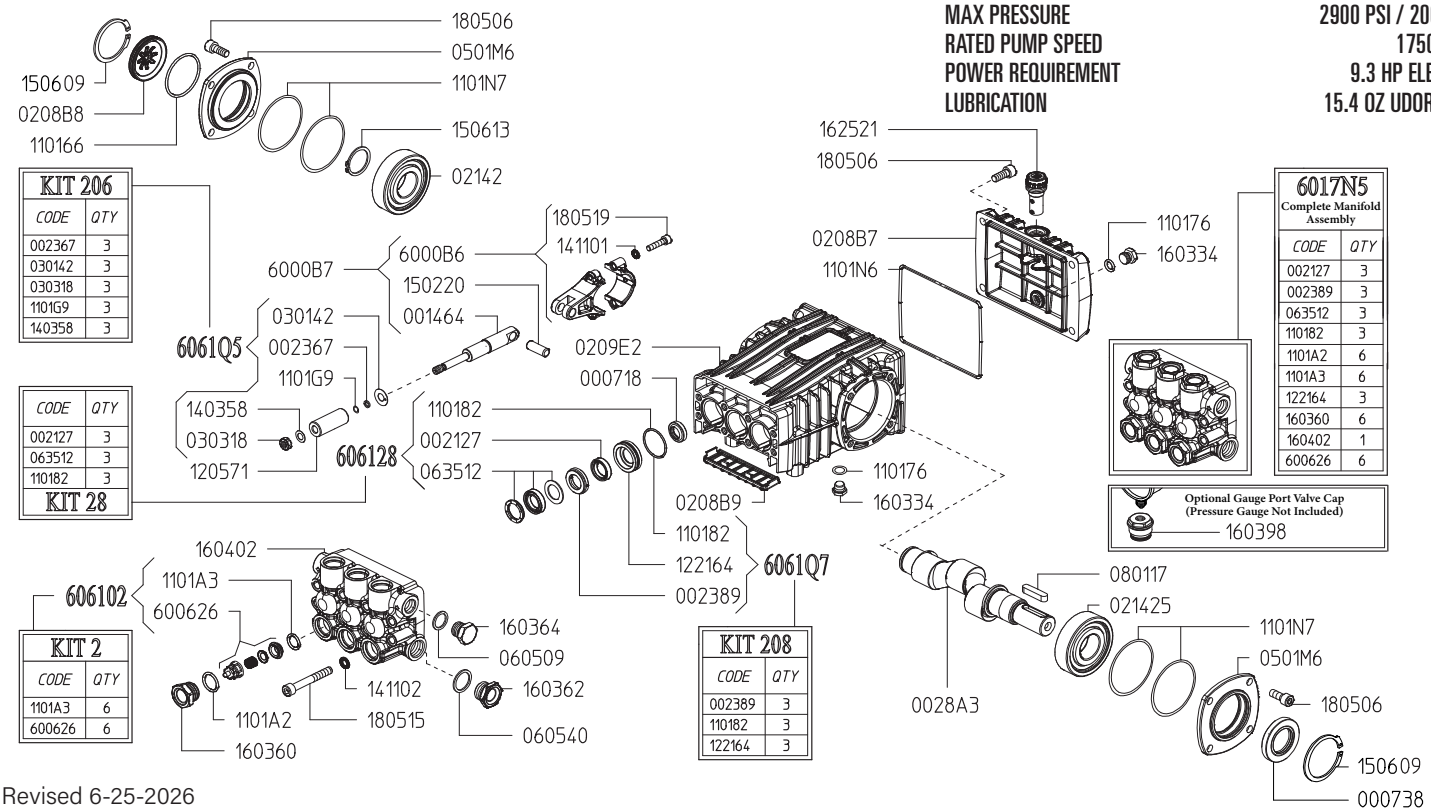

Revised 6-25-2026

Part #	Description	Qty
0007.18	OIL SEAL D15X24X5	3
0007.38	OIL SEAL D30	1
0014.64	PLUNGER GUIDE "B/BK"	3
0021.27	WATER SEAL LP D18[B E]	3
0023.67	RING D5.2X8X1.3[C]	3
0023.89	UPPER RING D18 "B/BK"[D E]	3
0028.A3	MALE SHAFT "B/BK" D24	1
0208.B7	BACK COVER "B/BK"	1
0208.B8	OIL SIGHT GLASS	1
0208.B9	COVER "B/BK"	1
0209.E2	CRANKCASE "B-X/BK-X"	1
0214.25	BEARING D30	2
0301.42	SLINGER RING[C]	3
0303.18	NUT M8XH5[C]	3
0501.M6	BEARING FLANGE "B/BK"	2
0605.09	GASKET D17X23X1.5	1
0605.40	GASKET D21.5X27X1.5	1
0635.12	HIGH PRESSURE SEAL KIT D18[B E]	3
0801.17	KEY A8X7X35	1
1101.66	O-RING - OIL SIGHT GLASS	1
1101.76	O-RING - PLUG	2
1101.82	O-RING - PRESSURE RING[B D E]	3
1101.A2	O-RING - VALVE PLUG[E]	6
1101.A3	O-RING - VALVE[A E]	6
1101.G9	O-RING - PLUNGER ROD[C]	3
1101.N6	O-RING - BACK COVER	1
1101.N7	O-RING - BEARING FLANGE	4
1205.71	CERAMIC PLUNGER D18 "B/BK"	3
1221.64	PRESSURE RING D18 "B/BK"[D E]	3

Part #	Description	Qty
1403.58	WASHER D8[C]	3
1411.01	SERATED WASHER D6	6
1411.02	SERATED WASHER D8	8
1502.20	PIN D10X27	3
1506.09	SNAP RING D52	2
1506.13	SNAP RING D30	1
1603.34	PLUG G1/4	2
1603.60	VALVE PLUG D15/18/20[E]	6
1603.62	PLUG G1/2	1
1603.64	PLUG G3/8	1
1603.98	GAUGE PORT VALVE CAP - OPTIONAL	1
1604.02	HEAD "B-X"[E]	1
1625.21	OIL PLUG G3/8	1
1805.06	ALLEN BOLT M8X20	12
1805.15	ALLEN BOLT M8X60	8
1805.19	ALLEN BOLT M6X25	6
6000.B6	CONNECTING ROD "B/BK"	3
6000.B7	COMPLETE CONNECTING ROD ASS'Y "B/BK"	3
6006.26	VALVE ASSEMBLY WITHOUT O-RING[A E]	6
6017.N5	COMPLETE MANIFOLD ASSEMBLY	1
6061.02	KIT 2 - VALVE KIT "PK/M/B"	1
6061.28	KIT 28 - WATER SEAL KIT	1
6061.Q5	KIT 206 - PLUNGER KIT D15/18 "B/BK"	1
6061.Q7	KIT 208 - BRASS RING KIT D18 "B/BK"	1

[A] Parts in 6061.02 (Kit 2).
[B] Parts in 6061.28 (Kit 28).
[C] Parts in 6061.Q5 (Kit 206).
[D] Parts in 6061.Q7 (Kit 208).
[E] Parts in 6017.N5 (Complete Manifold Assembly).

B SERIES DIMENSIONS

WEIGHT	20 LBS
LUBRICATION	15.4 OZ UDOR LUBE

Dimensional Drawings are Shown in Millimeters. To Convert to Inches, Multiply Dimension x 0.03937

B SERIES PUMPS - 24MM SOLID SHAFT

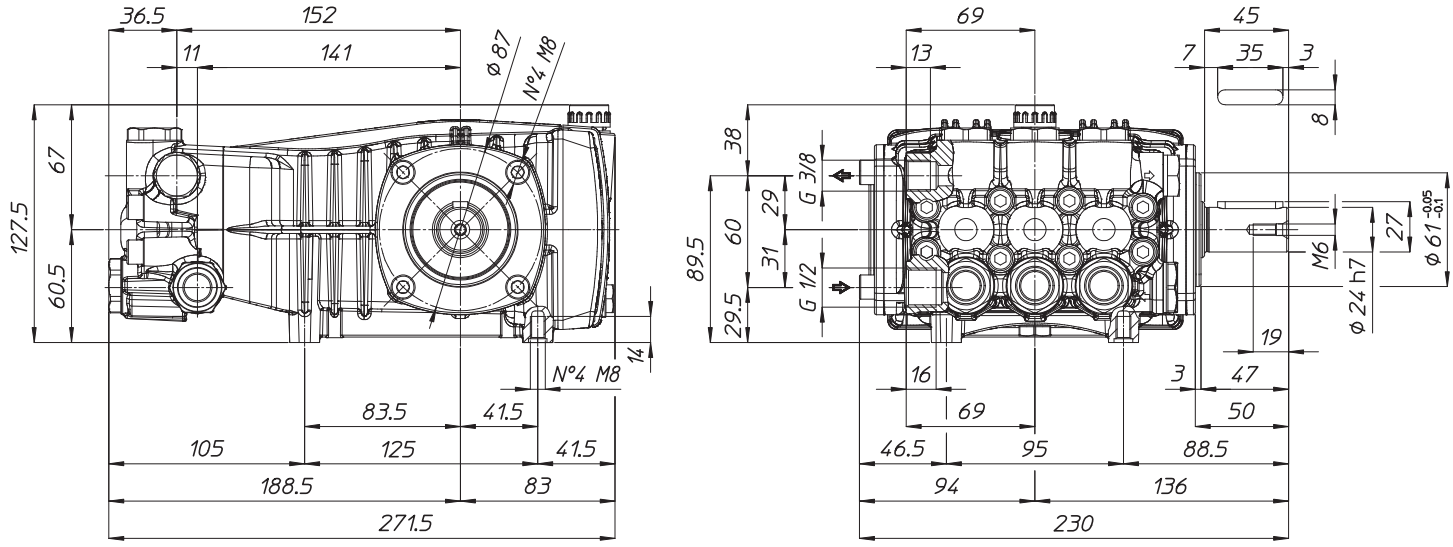

TORQUE SPECS

Ref.	Description	Ft./lb.	Nm	Loctite®
1	Head Bolts	19	25	-
2	Valve Caps	75	100	243
3	Inlet Cap	75	100	243
4	Outlet Cap	60	80	243
5	Bearing Flange Bolts	19	25	-
6	Rear Cover Bolts	19	25	-
7	Connecting Rod Bolts	9	11	243
8	Plunger Bolts	11	15	270
9	Valve Cover Bolts	-	-	-
10	Oil Drain Plug	19	25	-

