AWTC SERIES

High Temperature Solid Shaft Models

24mm Keyed Solid Shaft
1450 RPM

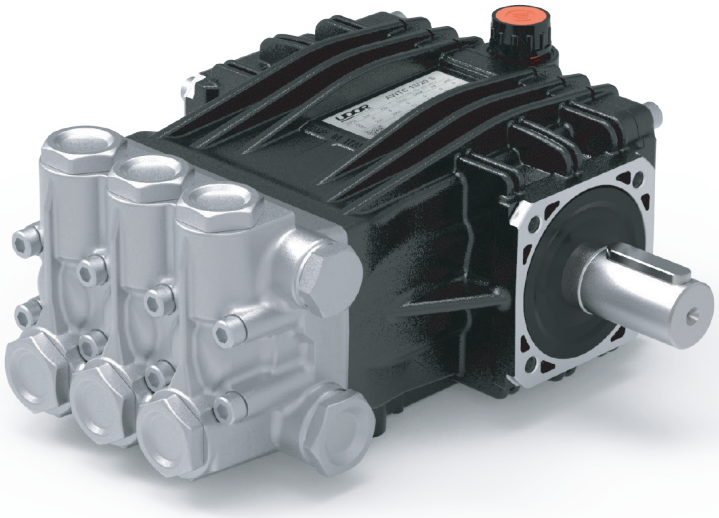

- **Nickel Plated Brass Manifold**
- **Stainless Steel Valve Caps**
- **Heat Treated Crankshaft**
- **Stainless Steel Piston Guides**
- **High Strength Aluminum Alloy Connecting Rods**
- **Industrial Quality Bearings**
- **Solid Ceramic Plungers**
- **Stainless Steel Check Valves**
- **High Temperature Seals for Hot Water Applications**
- **11.5 oz. Capacity Vented Oil Bath Crank Case**
- **1/2" BSP-F Inlet. 3/8" BSP-F Outlet**
- **Max Fluid Temp, 185°F**

AWT Series 24mm Keyed Solid Shaft Plunger Pumps

AWT Series high temperature rated plunger pumps include a range of models with flow rates from 2.4 to 4.0 GPM and pressures up to 2900 PSI.

These pumps are designed and engineered with high temperature seals and nickel plated manifolds to withstand the demands of hot water applications

AWT series pumps are well suited for general pressure cleaning, disinfecting and food/pharma applications.

		Flow		*Pressure*		*Plunger*	*Crankshaft*					
	Model	*GPM*	*l/min*	*PSI*	*bar*	Dia.	*Stroke*	*Code*	*Power*	*Seal Kit*	*Valve Kit*	*Wt.*
1450 RPM	AWTC 09/20 S	2.4	9.0	2900	200	15mm	12.5mm	S	4.6 EBHP	6061.07	6061.02	14.3 lbs
	AWTC 10/20 S	2.6	10.0	2900	200	15mm	14.0mm	7	5.1 EBHP	6061.07	6061.02	14.3 lbs
	AWTC 11/20 S	2.9	11.0	2900	200	18mm	10.5mm	O	5.6 EBHP	6061.E2	6061.02	14.3 lbs
	AWTC 12/20 S	3.2	12.0	2900	200	18mm	11.5mm	R	6.2 EBHP	6061.E2	6061.02	14.3 lbs
	AWTC 14/20 S	3.7	14.0	2900	200	18mm	12.5mm	S	7.0 EBHP	6061.E2	6061.02	14.3 lbs
	AWTC 15/20 S	4.0	15.0	2900	200	18mm	14.0mm	7	7.8 EBHP	6061.E2	6061.02	14.3 lbs

NOTE: All pump models available with left-hand drive option. Add 'L' to model number when ordering (ex. AWTC 11/20 SL)

UDOR USA
World Leader in Diaphragm and Plunger Pumps

6180 140th Avenue NW
Ramsey, MN 55303

Ph: 651-785-0666
Fax: 800-732-2670

www.udorusa.com
sales@udorusa.com

Scan this QR Code for More Information

AWTC 15/20 S

MAX FLOW	4.0 GPM / 15.0 L/MIN
MAX PRESSURE	2900 PSI / 200 BAR
RATED PUMP SPEED	1450 RPM
POWER REQUIREMENT	7.8 HP ELECTRIC
LUBRICATION	11.5 OZ UDOR LUBE

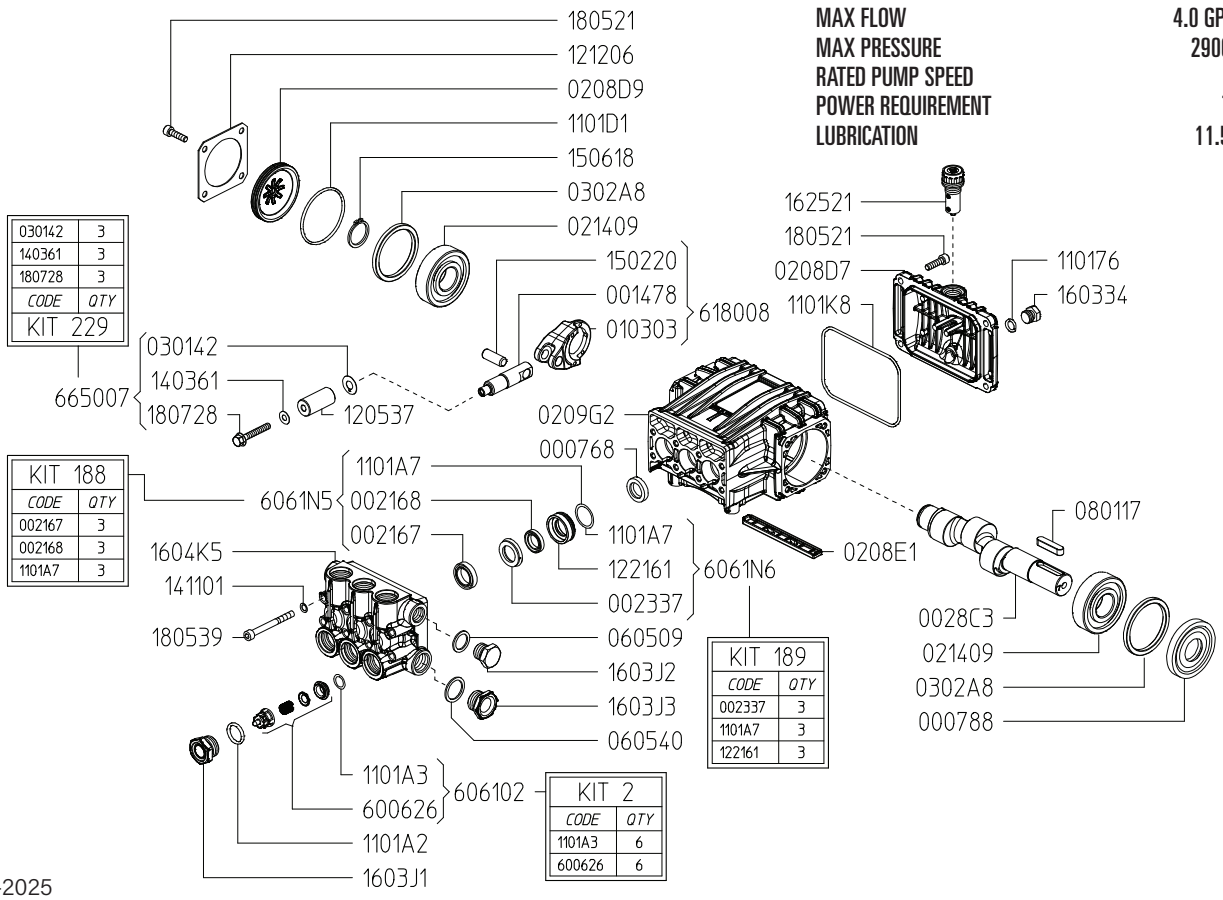

Revised 5-7-2025

Part #	Description	Qty
0007.68	OIL SEAL	3
0007.88	OIL SEAL	1
0014.78	PLUNGER GUIDE	3
0021.67	WATER SEAL HP D18 [B]	3
0021.68	WATER SEAL LP D18 [B]	3
0023.37	UPPER RING [C]	3
0028.C5	CRANKSHAFT – 24MM SOLID KEYED	1
0103.03	CONNECTING ROD	3
0208.D7	BACK COVER	1
0208.D9	OIL SIGHT GLASS	1
0209.G2	CRANKCASE	1
0214.09	BALL BEARING	2
0301.42	SLINGER RING [D]	3
0302.A8	SPACER	1
0302.A8	SPACER	1
0605.09	GASKET	1
0605.40	GASKET	1
0801.07	KEY	1
1101.76	O-RING	1
1101.A2	O-RING – VALVE CAP	6
1101.A3	O-RING – VALVE [A]	6
1101.A7	O-RING [B C]	3
1101.D1	O-RING – OIL SIGHT GLASS	1
1101.K8	O-RING – BACK COVER	1
1205.37	CERAMIC PLUNGER, D18	3

Part #	Description	Qty
1212.06	RETAINER – SIGHT GLASS	1
1221.61	PRESSURE RING [C]	3
1403.61	WASHER [D]	3
1411.01	SERRATED WASHER	8
1502.20	PIN	3
1506.18	SNAP RING	1
1603.34	DRAIN PLUG	1
1603.J1	VALVE CAP	6
1603.J2	PLUG	1
1603.J3	PLUG	1
1604.K5	HEAD	1
1625.21	OIL PLUG – G3/8	1
1805.21	ALLEN BOLT	4
1805.21	ALLEN BOLT	4
1805.39	ALLEN BOLT	8
1807.28	PLUNGER BOLT [D]	3
6006.26	VALVE ASS'Y W/O O-RING [A]	6
6180.08	CONNECTING ROD ASSEMBLY	3
6061.02	VALVE KIT (KIT 2)	1
6061.N5	WATER SEAL KIT (KIT 188)	1
6061.N6	BRASS RING KIT (KIT 189)	1
6650.07	PLUNGER BOLT KIT (KIT 229)	1

[A] Parts in 6061.02 (Kit 2).
[B] Parts in 6061.N5 (Kit 188).
[C] Parts in 6061.N6 (Kit 189).
[D] Parts in 6650.07 (Kit 229).

AWT SERIES DIMENSIONS

WEIGHT 14.3 LBS
LUBRICATION 11.5 OZ UDOR LUBE

Dimensional Drawings are Shown in Millimeters. To Convert to Inches, Multiply Dimension x 0.03937

AWT SERIES PUMPS - 24MM SOLID SHAFT

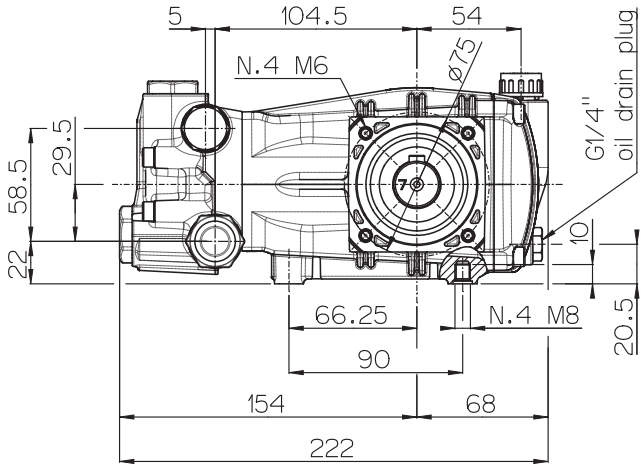

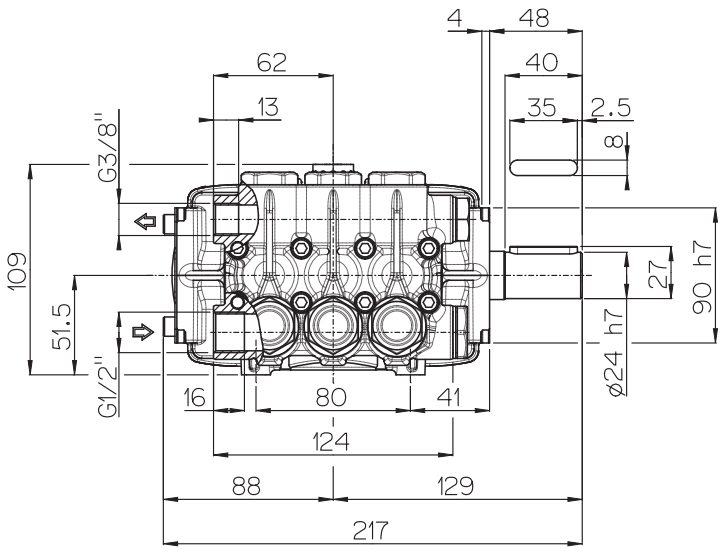

TORQUE SPECS

Ref.	Description	Ft./lb.	Nm	Loctite®
1	Head Bolts	19	25	-
2	Valve Caps	75	100	243
3	Inlet Cap	75	100	243
4	Outlet Cap	60	80	243
5	Bearing Flange Bolts	19	25	-
6	Rear Cover Bolts	19	25	-
7	Connecting Rod Bolts	9	11	243
8	Plunger Bolts	11	15	270
9	Valve Cover Bolts	-	-	-
10	Oil Drain Plug	19	25	-

