Model ASH CLEANER E15

Version:

Serial number:

Code: **51895**

29/06/2018

230 V - 50 Hz | **schuko**

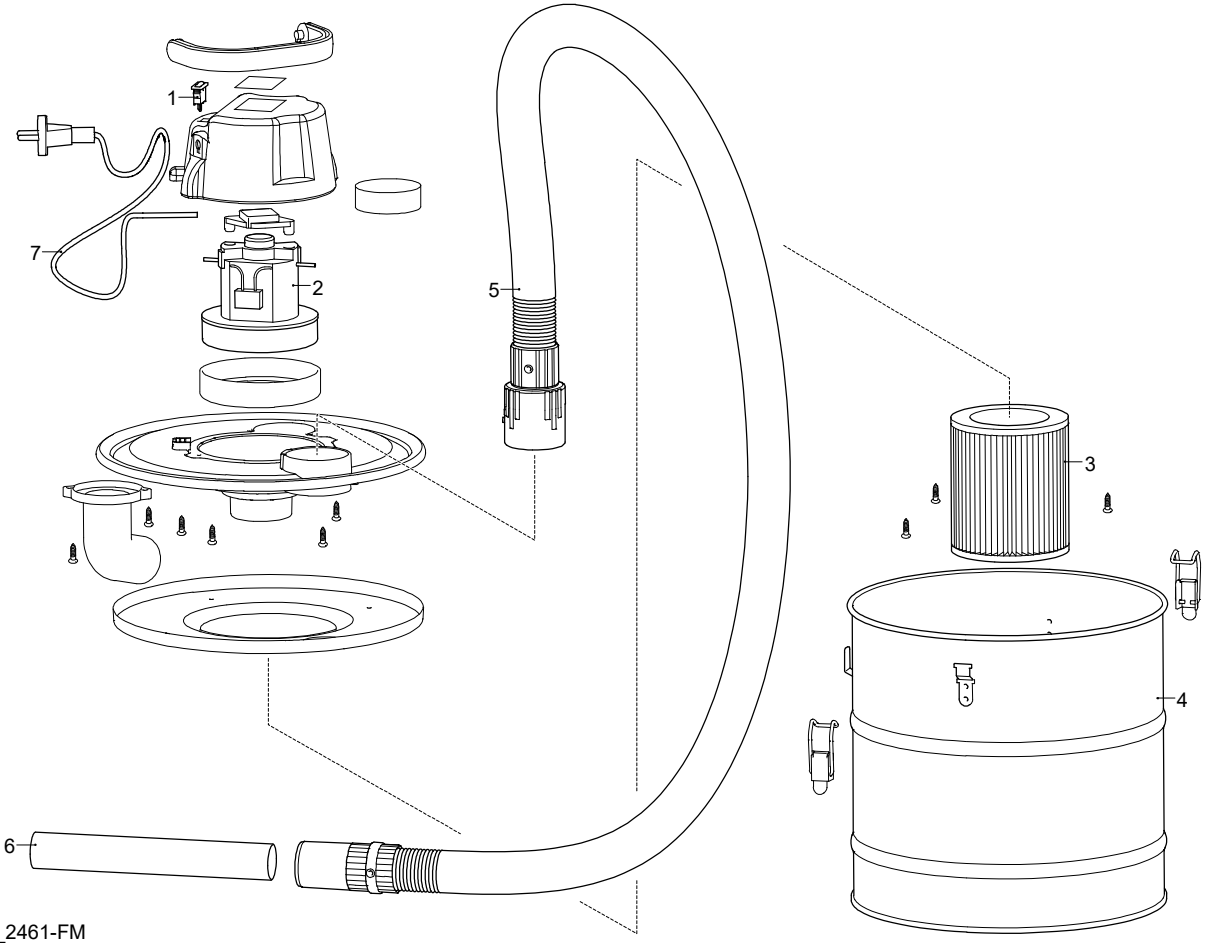

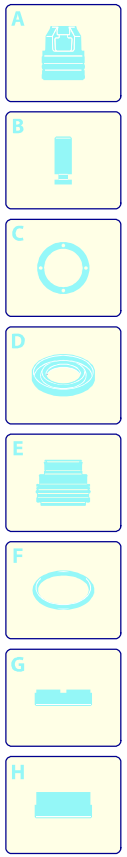

UN_CE_2461-FM

Validity	Pos.	Code	Description	Q
	1	5060020	Switch	1
	2	5060030	Motor	1
	3	5060050	Cartridge filter	1
	4	5060040	Tank	1
	5	5060060	Metal pipe	1
	6	5060070	Metal lance	1
	7	5060010	Cable	1