ASH CLEANER E12B

Version:

Serial number:

Code: **52004**

28/05/2019

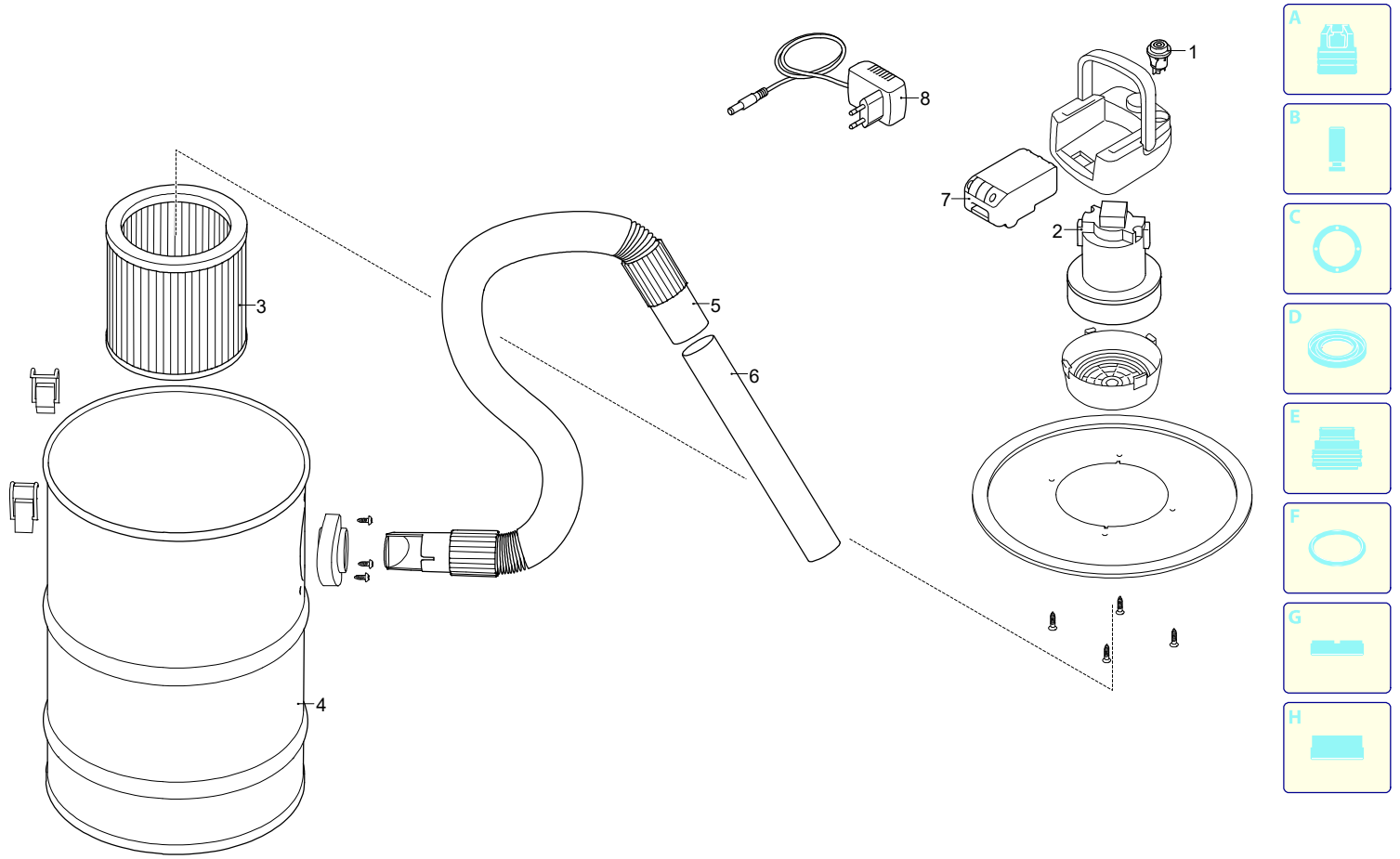

UN_CE_2579-EL

Validity	Pos.	Code	Description	Q
	1	5060180	Switch	1
	2	5060190	Motor	1
	3	5060120	Cartridge filter	1
	4	5060210	Tank	1
	5	5060130	Metal pipe	1
	6	5060070	Metal lance	1
	7	5060140	Battery	1
	8	5060150	Battery charger	1