ANNOVI REVERBERI
The Power of Experience

Modello AR SPRAY 15

Version:
Serial number:
Code: **52180**

29/10/2020

100-240 V - 50/60 Hz | **schuko**

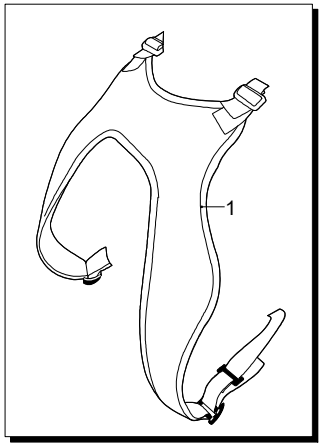

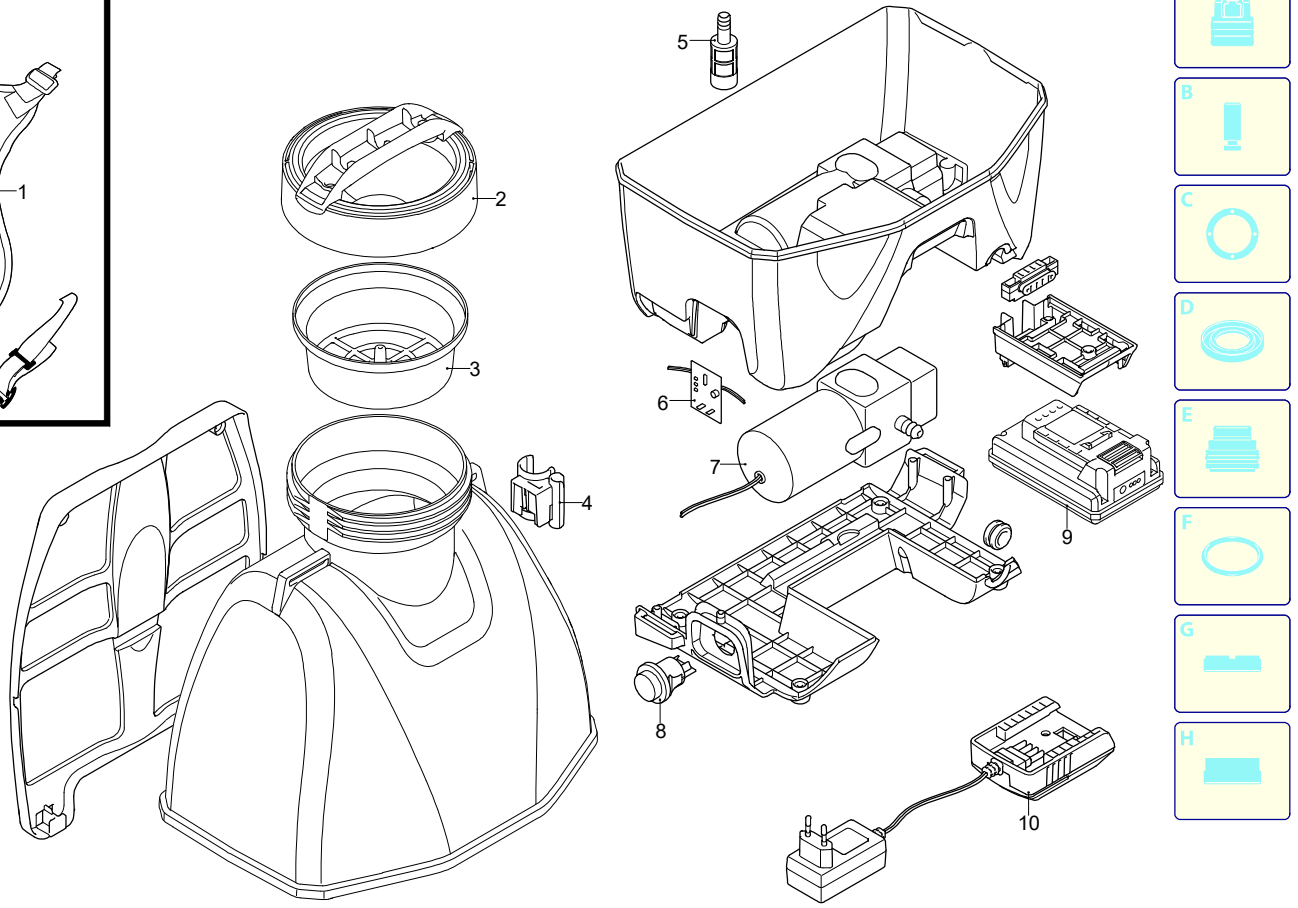

UN_CE_2871-LK

Validity	Pos.	Code	Description	Q
	1	5320070	Belt	1
	2	5320130	Plug	1
	3	5320140	Filter	1
	4	5320060	Accessories carrier	1
	5	5320090	Filter	1
	6	5320100	Board	1
	7	5320120	Pump	1
	8	5320110	Switch	1
	9	5320040	Battery	1
	10	5320050	Battery charger	1

ANNOVI REVERBERI
The Power of Experience

Modello AR SPRAY 15

Version:
Serial number:
Code: **52180**

29/10/2020

100-240 V - 50/60 Hz | **schuko**

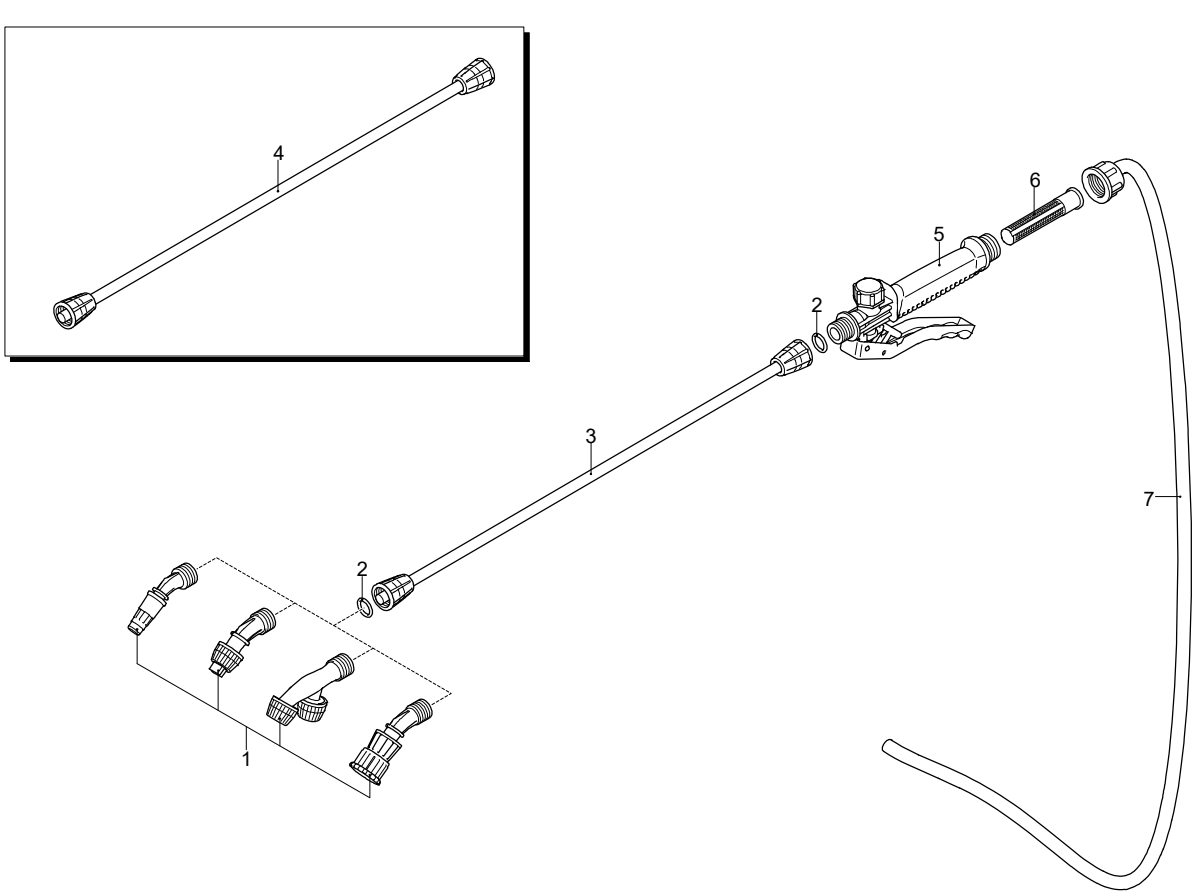

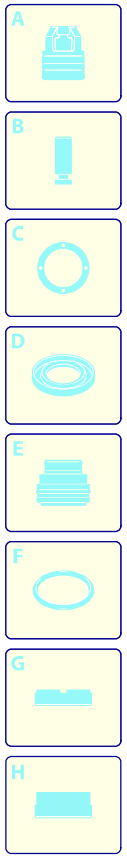

Validity	Pos.	Code	Description	Q
	1	5320030	Nozzle kit	1
	2	5320160	O-ring	2
	3	5320020	Lance	1
	4	5320170	Lance	1
	5	5320010	Gun	1
	6	5320150	Filter	1
	7	5320080	Pipe	1

UN_CE_2872-LK