ANNOVI REVERBERI
The Power of Experience

Modello AR20M (4IN1)

Version:
Serial number:
Code: **52014**

01/08/2019

230 V - 50 Hz | **schuko**

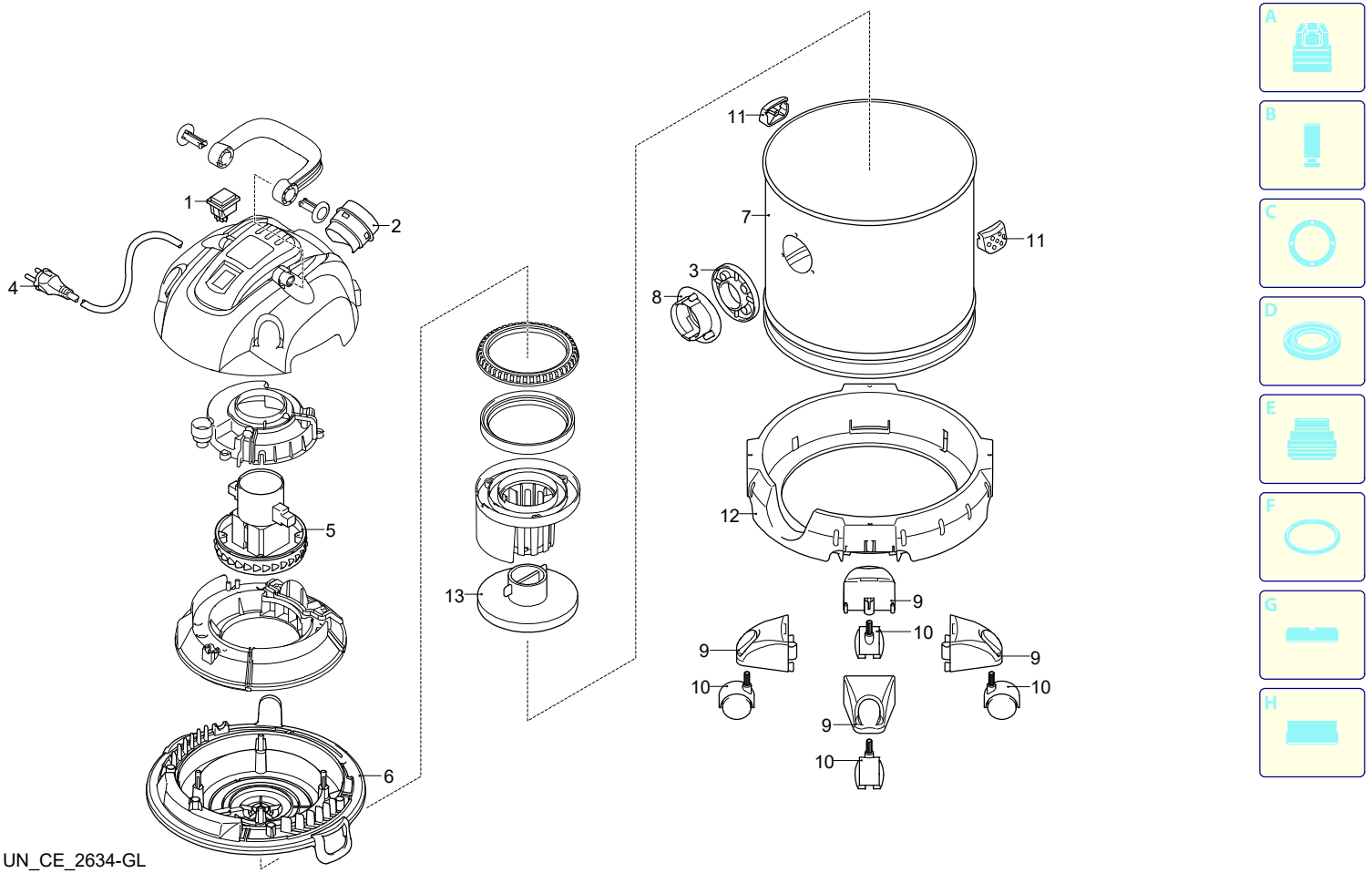

UN_CE_2634-GL

Validity	Pos.	Code	Description	Q
	1	4340350	Switch	1
	2	4340830	Orifice	1
	3	4340100	Support	1
	4	4340690	Cable	1
	5	4340450	Motor	1
	6	4340840	Base	1
	7	4340870	Tank	1
	8	4340090	Orifice	1
	9	4340400	Support	1
	10	4340410	Wheel	1
	11	4341751	Hook	1
	12	4341760	Base	1
	13	4341670	Support	1

ANNOVI REVERBERI
The Power of Experience

Modello AR20M (4IN1)

Version:
Serial number:
Code: **52014**

01/08/2019

230 V - 50 Hz | **schuko**

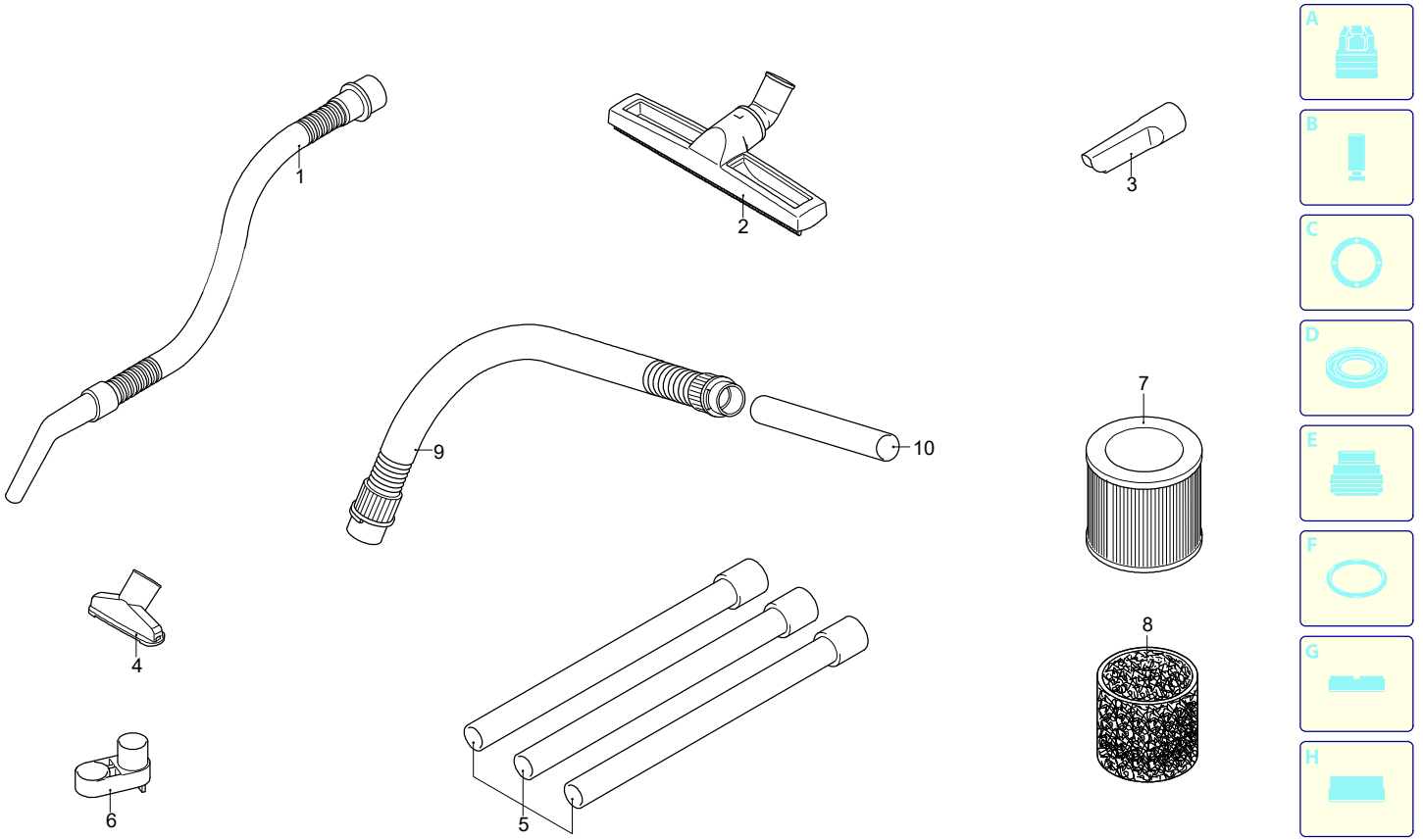

Validity	Pos.	Code	Description	Q
	1	4341310	Pipe	1
	2	4341430	Brush	1
	3	4340170	Lance	1
	4	4340180	Brush	1
	5	4340200	Plastic pipe (Q.ty 3)	1
	6	4341400	Accessories carrier	1
	7	4341680	Cartridge filter (Q.ty 1)	1
	8	4341690	Sponge filter	1
	9	4341700	Metal pipe	1
	10	4341710	Metal lance	1

UN_CE_2635-GL