A.R. NORTH AMERICA

AR 1604

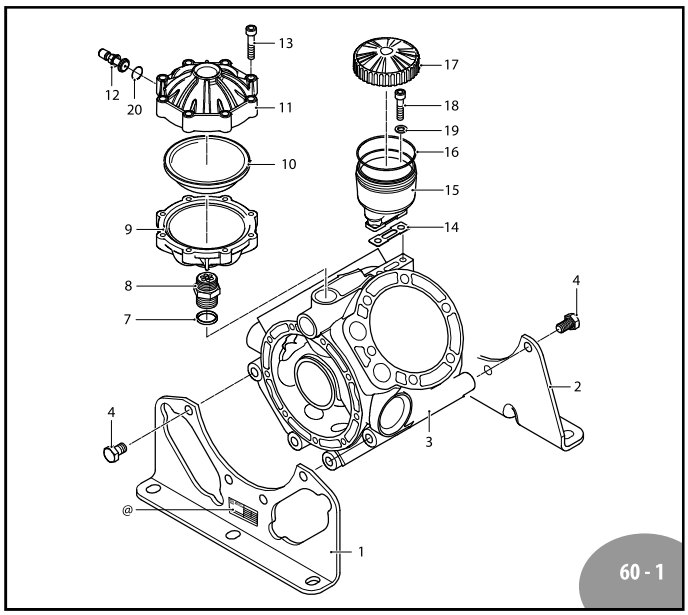

60 - 1

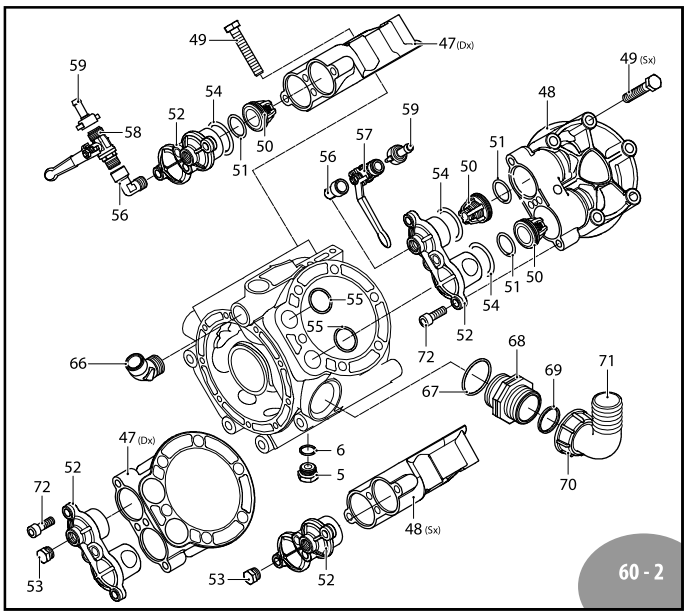

60 - 2

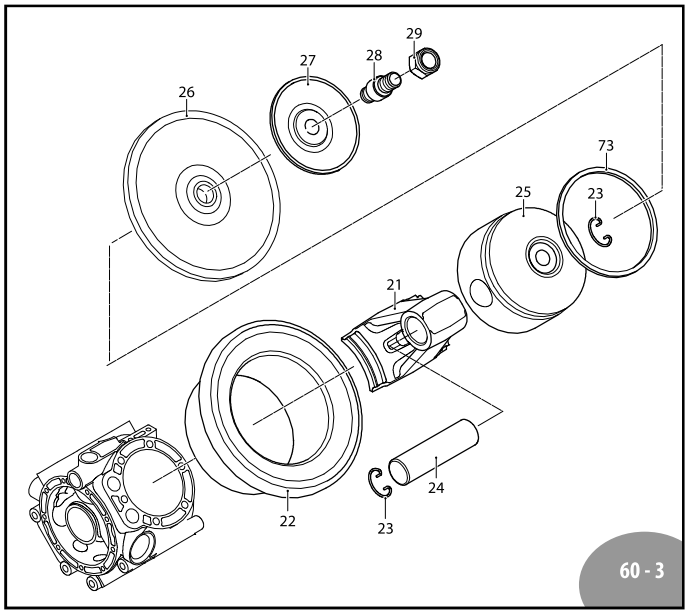

60 - 3

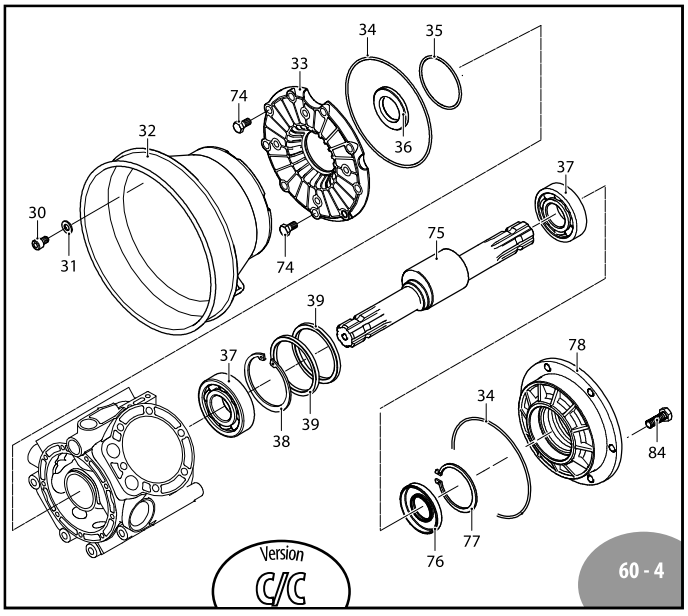

60 - 4

AR 1604

	C/C
AR1604	31759

Pos	Code	Description		Qty	Note
1	3920030	Base	front	1	
2	3920040	Base	back	1	
3	3920010	Pump body		1	
4	1520861	Bolt	TE M12x20	8	T445* (a)
	540210	Bolt	TE M12x25	8	T445* (b)
5	820361	Plug	1/2" G brass	1	T180*
6	180101	O-ring	Ø17.5x2	1	
7	720030	O-ring	Ø22.22x2.62	1	
8	2240490	Fitting		1	T180*
9	2240481	Semi air chamber	lower	1	T180*
10	550190	Diaphragm	air chamber	1	NBR
	550194	Diaphragm	air chamber	1	BlueFlex™
11	620234	Semi air chamber	upper	1	Anodized
12	180020	Air valve		1	T310*
13	380410	Bolt	TCEI M8x40	8	T180*
14	750040	Gasket		1	
15	750030	Oil sight glass		1	
16	1040060	O-ring	Ø72.69x2.62	1	
17	750050	Plug	red	1	
18	680350	Bolt	TCEI M8x35	2	T90*
19	380241	Washer		2	
20	650542	Gasket		1	
21	3920020	Connecting-rod	bronze	4	
22	2680080	Sleeve		4	
23	160691	Ring	circlip Øi 18	8	
24	260700	Pin		4	
25	2240060	Piston	Ø72	4	
26	550080	Diaphragm		4	NBR
	550081	Diaphragm		4	BlueFlex™
	550085	Diaphragm		4	DESMOPAN
	550086	Diaphragm		4	HPDS
27	580090	Retaining washer		4	
28	2240100	Hub pin		4	(c) T310*
29	2240110	Nut	M10	4	SS T265*
30	850250	Bolt	TCEI M8x12	4	T90*
31	390311	Washer		4	
32	1500470	Shield		1	
33	2680050	Manifold	suction	1	
34	1400120	O-ring	Ø145.72x2.62	2	
35	2240270	O-ring	Ø 67.95x2.62	1	
36	2680110	Ring	seal	1	
37	751280	Bearing		2	
38	230340	Ring	circlip Øi 80	1	
39	2240540	Ring	connecting rod	2	
41	2680340	Bearing		1	
42	2680290	Ring	circlip Øe 65	1	
43	2680240	Flange		1	
44	1400150	Ring	seal	1	

Pos	Code	Description		Qty	Note
45	1400140	Flange		1	
46	1400110	Ring		1	
47	2680030	Head	marked DX	2	
48	2680031	Head	marked SX	2	
49	750070	Bolt	TE M12x70	24	T445*
50	2689050	Valve		8	
51	180240	O-ring	Ø31.34x3.53	8	
52	2680040	Cover		4	
53	130171	Plug	3/8" G	3	T180*
54	2680150	O-ring	Ø42.52x2.62	8	
55	1520650	O-ring	Ø29.82x2.62	8	
56	900210	Fitting	3/8" G M-F	2	
57	130491	Ball valve	3/8" G - 1/2" GM-M DX	1	
58	130492	Ball valve	3/8" G - 1/2" GM-M SX	1	
59	110131	Ring nut	1/2"	2	
65	880831	O-ring	Ø15.54x2.62	1	Viton
66	851650	Elbow	manifold	1	
67	751140	O-ring	Ø47.22x3.53	1	
68	751130	Fitting	1"1/2 G M-M	1	
69	390290	O-ring	Ø29x3	1	
70	750670	Ring nut	1 1/2" G	1	
71	50267	Elbow	1 1/2"	1	
72	540300	Bolt	TCEI M10x30	16	T310*
73	260230	Piston ring		4	
74	180370	Bolt	TE M8x25	9	T180*
75	2680190	Shaft	C/C m-CM	1	
76	2680120	Ring	seal	1	
77	161050	Ring	circlip Øi 72	1	
78	2680020	Flange		1	
80	750920	Bearing		1	
81	2680021	Flange		1	
82	2680130	Ring	seal	1	
83	2420250	Ring	center	1	
84	160670	Bolt	TE M10x25	6	T355*

@ Pump and manufacturer identification.
(a) From serial number N° 39249140001.
(b) Up to serial number N° 39248149999.
(c) Bolt with Loctite 242 pin side piston.

* Torque: in-lbs +/- 10%

AR 43313
BlueFex™ diaphragms

AR 43310
Buna diaphragms

AR 43312
Viton diaphragms

AR 43311
Desmopan diaphragms

Pos.	Qty
10	1
26	4
55	8

AR 42941
Valves

Pos.	Qty
50	8
51	8

AR 42942
O-Rings

Pos.	Qty	Pos.	Qty
6	1	69	1
7	2		
16	1		
34	2		
35	1		
51	8		
54	8		
55	8		
65	1		
67	1		

Suggested Oil

Type	Oz
AR64532D	32

Crankcase Oil
Capacity 78 oz