HIGH PRESSURE DIAPHRAGM PUMPS

APS141

5 Diaphragm

NBR | 50 bar 725 psi | 169 l/min 44.6 US gpm | AA

RPM 550

Suction

Ø 45

Delivery

2 x Ø 10
1 x G 3/4" F

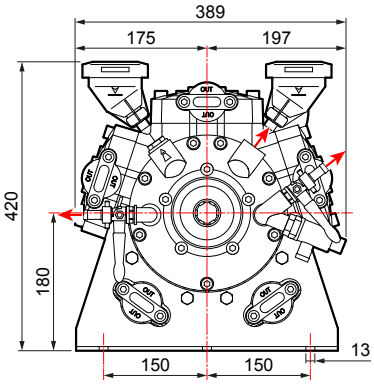

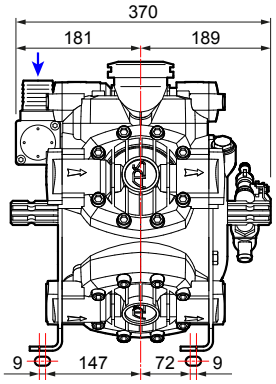



Available Models

APS 141

1 3/8" Male 6 Splined Shaft on Boths Sides



Accessories & Repair Kits

Comet Oil



8102.1801.00

ALFA 2 Regulator



1204.1801.00

ORION 2 Regulator



1204.1701.00

VRS Regulator



1215.0287.00

Shaft Protector



2416.0307.00

Rebuild Kit



NBR: 5026.0091.00

	0 bar - 0 p.s.i				20 bar - 290 p.s.i				30 bar - 435 p.s.i				40 bar - 580 p.s.i				50 bar - 725 p.s.i					
RPM	l/min	U.S.g.p.m.	HP	kW	l/min	U.S.g.p.m.	HP	kW	l/min	U.S.g.p.m.	HP	kW	l/min	U.S.g.p.m.	HP	kW	l/min	U.S.g.p.m.	HP	kW	kg	lb
400	109	28.8	1.1	0.8	106	28.0	6.0	4.4	104	27.5	8.3	6.1	103	27.2	10.6	7.8	102	26.9	12.9	9.5		
450	122	32.2	1.3	1.1	118	31.2	6.7	4.9	117	30.9	9.4	6.9	116	30.6	12.0	8.8	115	30.4	14.5	10.7		
500	132	34.9	1.4	1.0	129	34.1	7.3	5.4	129	34.1	10.3	7.6	128	33.8	13.2	9.7	128	33.8	16.2	11.9	56	123.5
550	145	38.3	1.5	1.1	142	37.5	8.1	6.0	142	37.5	11.4	8.4	141	37.2	14.6	10.7	141	37.2	17.8	13.1		