ANNOVI REVERBERI S.p.A.
Via M. L. King, 3 - 41122 Modena (Italy)
Tel. (+39) 059.414.411 - Fax (+39) 059.253.505
E - Mail: industria@annovireverberi.it

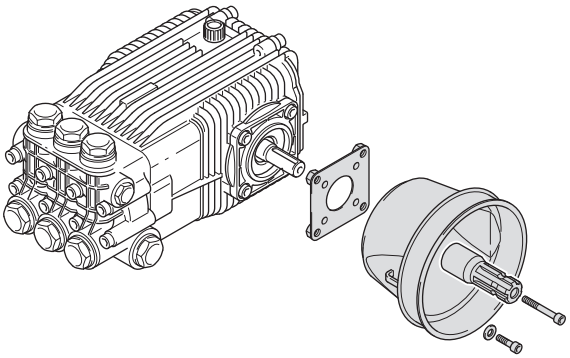

1

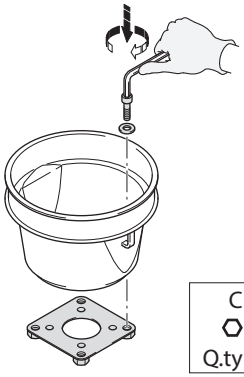

C = 5 Nm
⬡ = 6 mm
Q.ty = 4

2

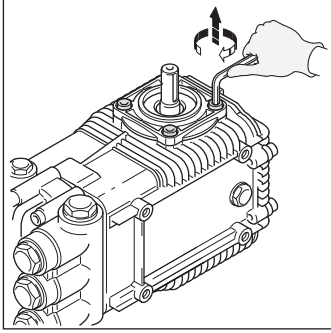

3

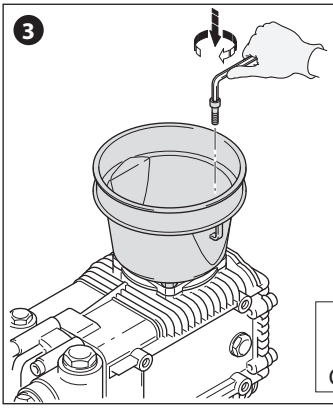

C = 24,5 Nm
⬡ = 6 mm
Q.ty = 4

4

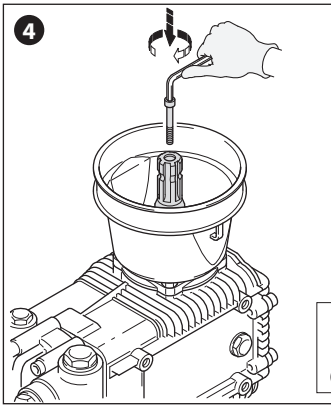

C = 10,6 Nm
⬡ = 5 mm
Q.ty = 1

cod. 99537-BS