Model 930 TSS

Version:

Serial number:

Code: **14261**

08/03/2018

230 V - 50 Hz | **schuko**

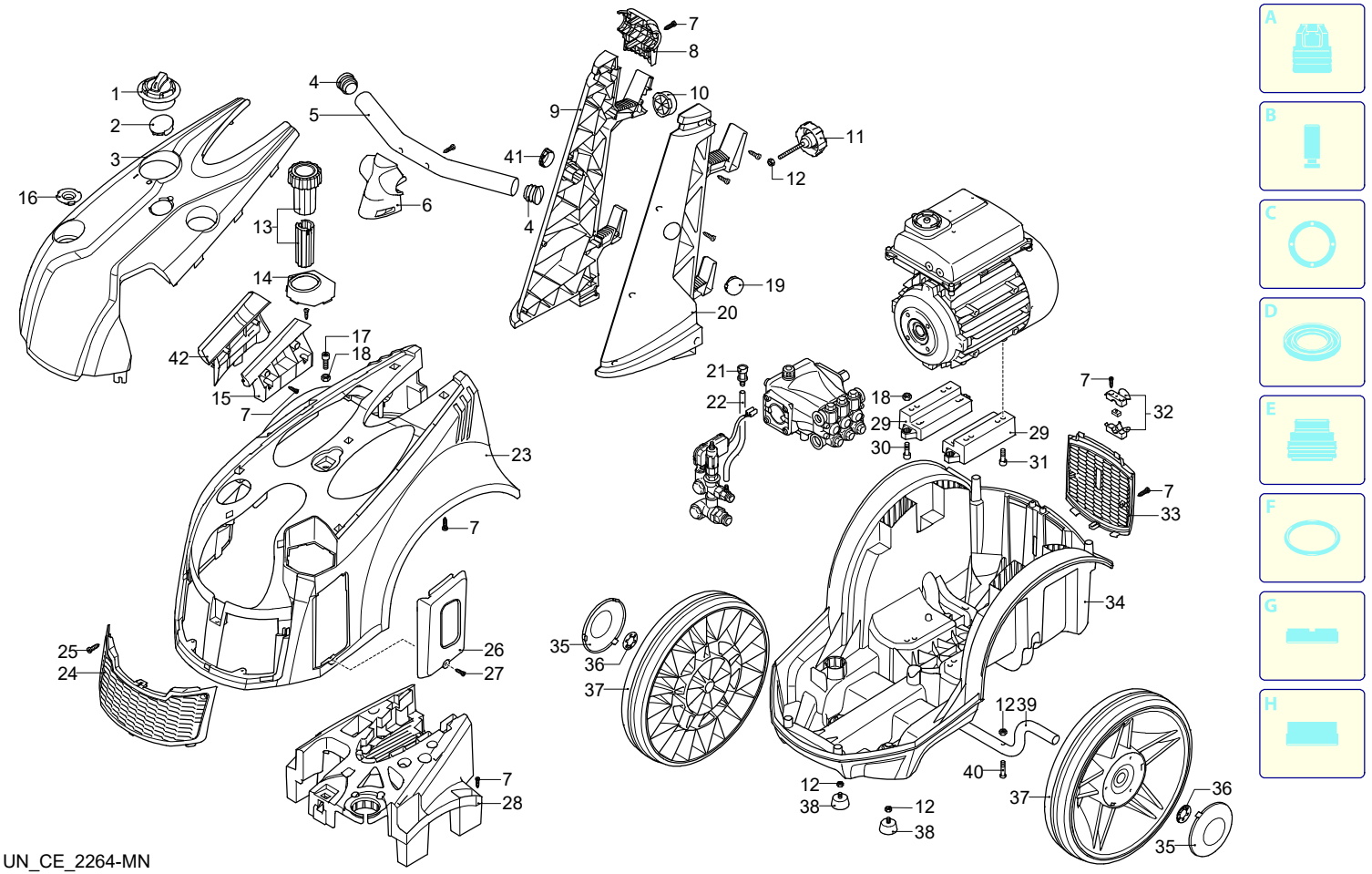

UN_CE_2264-MN

Validity	Pos.	Code	Description	Q
	1	3560510	Knob	1
	2	3560530	Plug	1
	3	3560400	Casing	1
	4	3560500	Plug	2
	5	3560470	Handle	1
	6	3560480	Support	1
	7	2100300	Screw	13
	8	3560490	Support	1
	9	3560300	Handle	1
	10	2500130	Rubber foot	1
	11	3569004	Knob	1
	12	390440	Nut	5
	13	3569000	Knob	1
	14	3560650	Cover	1
	15	3560750	Accessories carrier	1
	16	3560520	Support	1
	17	540290	Screw	1
	18	380240	Nut	5
	19	3560730	Plug	1
	20	3560290	Handle	1
	21	1341030	Filter	1
	22	1266650	Pipe	1
	23	3560280	Casing	1
	24	3560410	Guard	1
	25	2440290	Screw	2
	26	3560640	Casing	1
	27	4240590	Screw	1
	28	3560360	Support	1
	29	3560340	Support	2
	30	180370	Screw	4
	31	850250	Screw	4
	32	3560600	Cable gland	1
	33	3560380	Guard	1
	34	3560270	Base	1
	35	3560330	Cover	2
	36	380620	Washer	2
	37	3560320	Wheel	2
	38	2360780	Vibration damper	2
	39	3560350	Axle	1
	40	3780650	Screw	2
	41	3560740	Plug	1
	42	3560390	Accessories carrier	1

Model 930 TSS

Version:

Serial number:

Code: **14261**

08/03/2018

230 V - 50 Hz | **schuko**

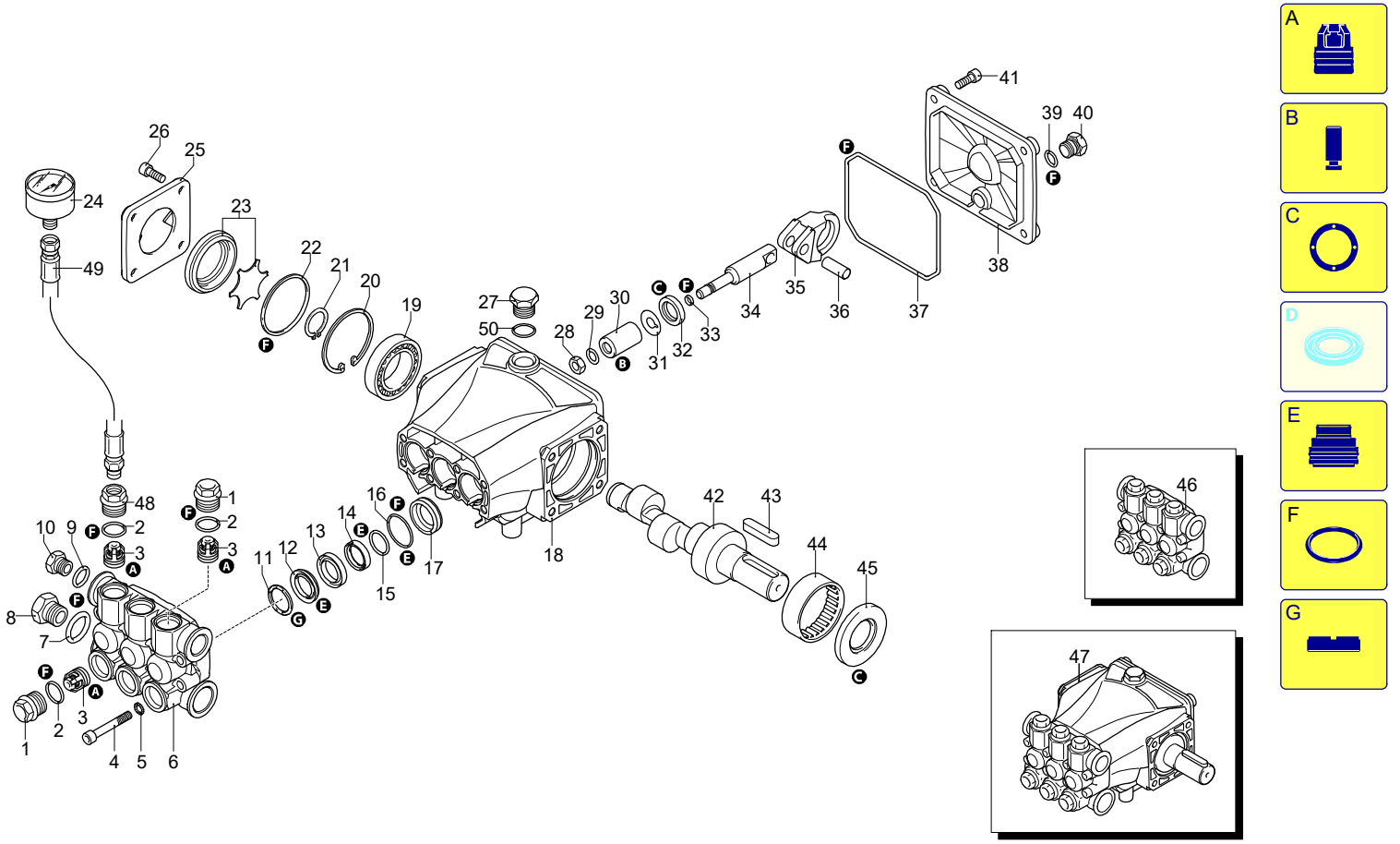

UN_CE_2341-AM

Validity	Pos.	Code	Description	Q
	1	3200110	Plug	5
	2	1200690	O-ring	6
	3	2769050	Complete valve	6
	4	800410	Screw	8
	5	1381550	Washer	8
	6	3200020	Head	1
	7	180101	O-ring	1
	8	820361	Plug	1
	9	740290	O-ring	1
	10	1980740	Plug	1
	11	1780140	Ring	3
	12	1780720	Water seal	3
	13	3200130	Piston guide	3
	14	3200142	Gasket	3
	15	3200260	Ring	3
	16	770590	O-ring	3
	17	3200120	Piston guide	3
	18	3200010	Pump body	1
	19	1780490	Bearing	1
	20	1260790	Ring	1
	21	1780550	Ring	1
	22	395081	O-ring	1
	23	3209615	Oil level assembly	1
	24	43793	Pressure gauge	1
	25	3200070	Support	1
	26	1200430	Screw	4
	27	1980740	Plug	1
	28	1260110	Nut	3
	29	1260100	Washer	3
	30	1260210	Piston	3
	31	1260091	Plate	3
	32	1260460	Oil seal	3
	33	480480	O-ring	3
	34	3200060	Piston	3
	35	3200040	Connecting-rod	3
	36	1780050	Pin	3
	37	2760280	O-ring	1
	38	3200030	Cover	1
	39	820510	O-ring	1
	40	880581	Plug	1
	41	3200220	Screw	4
	42	3200300	Shaft	1
	43	3200230	Key	1
	44	1321190	Bearing	1
	45	1260750	Ring	1
	46	42948	Head assembly	1
	47	23384	Pump assembly	1
	48	3200430	Plug	1
	49	3560800	Pipe	1
	50	740290	O-ring	1
	A	2186	Valve kit	1
	B	42467	Piston kit	1
	C	42468	Oil seal kit	1
	E	42469	Water seal kit	1
	F	42470	Gasket kit	1
	G	2745	Support ring kit	1

Model 930 TSS

Version:

Serial number:

Code: **14261**

08/03/2018

230 V - 50 Hz | **schuko**

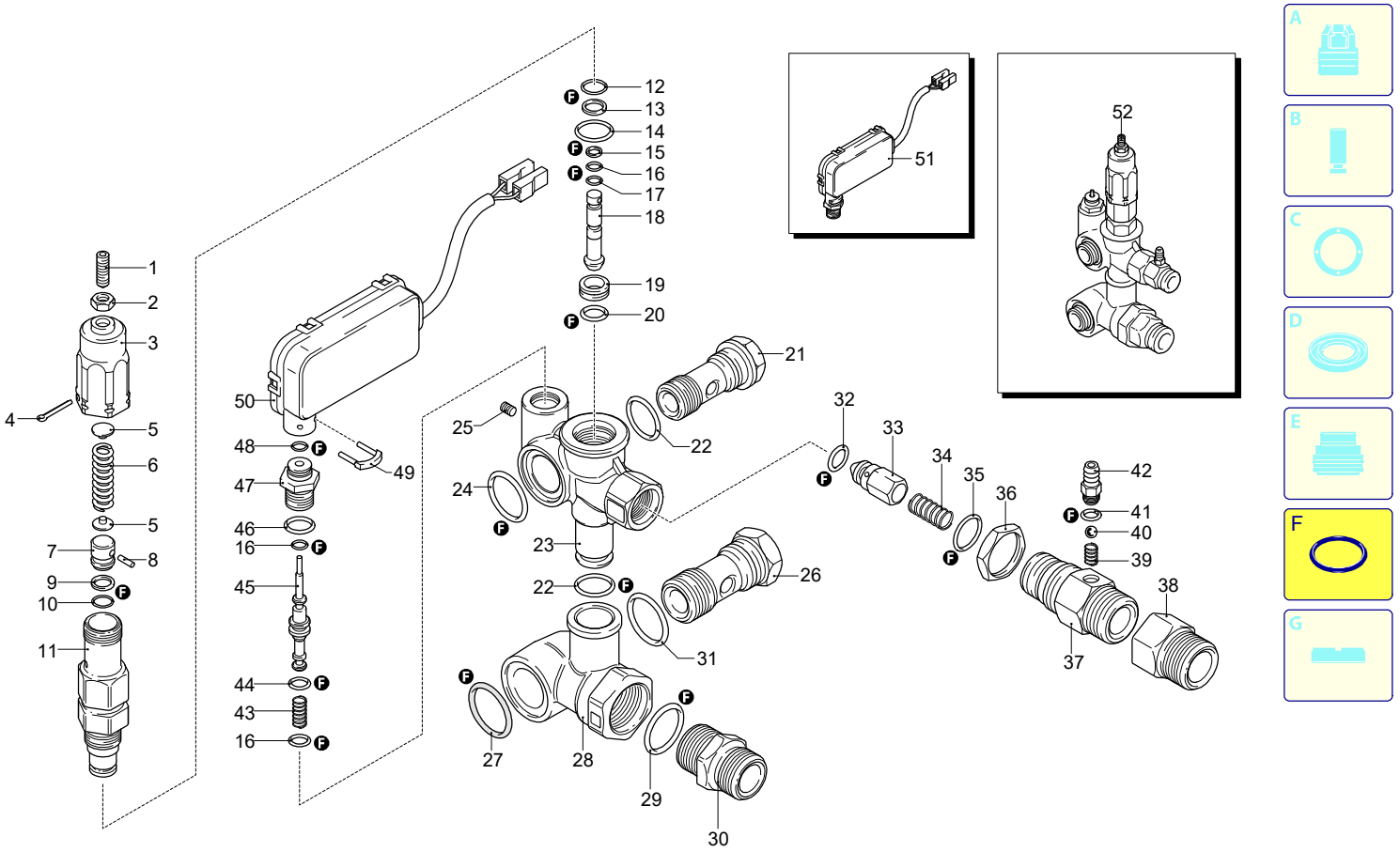

UN_CE_2372-AM

Validity	Pos.	Code	Description	Q
	1	392840	Screw	1
	2	1980300	Nut	1
	3	2500540	Insert	1
	4	2500550	Split pin	1
	5	1980220	Wobble plate	2
	6	1271070	Spring	1
	7	1080041	Piston	1
	8	1080070	Pin	1
	9	1080401	Ring	1
	10	1080250	O-ring	1
	11	1980210	Piston guide	1
	12	740290	O-ring	1
	13	800560	O-ring	1
	14	880830	O-ring	1
	15	1271170	Ring	1
	16	1080192	O-ring	3
	17	1120681	O-ring	1
	18	1271160	Piston	1
	19	2460420	Seat	1
	20	1080250	O-ring	1
	21	1540272	Screw	1
	22	390080	O-ring	2
	23	1540660	Valve body	1
	24	1140450	O-ring	1
	25	1981190	Screw	1
	26	2260420	Screw	1
	27	1540630	O-ring	1
	28	1540280	Suction fitting	1
	29	480440	O-ring	1
	30	3560830	Fitting	1
	31	880270	O-ring	1
	32	1460430	O-ring	1
	33	1540170	Shutter	1
	34	1080091	Spring	1
	35	394280	O-ring	1
	36	1540300	Nut	1
	37	1540290	Fitting	1
	38	3560840	Fitting	1
	39	1560520	Spring	1
	40	1250280	Ball	1
	41	480480	O-ring	1
	42	1560490	Hose tail	1
	43	1981320	Spring	1
	44	660191	O-ring	1
	45	1540881	Piston	1
	46	880840	O-ring	1
	47	1540870	Plug	1
	48	1260820	O-ring	1
	49	2022201	Fork	1
	50	2029801	TSS box assembly	1
	51	42990	TSS kit	1
	52	1549051	Complete valve	1
	F	42451	Gasket kit	1

Model 930 TSS

Version:

Serial number:

Code: **14261**

08/03/2018

230 V - 50 Hz | **schuko**

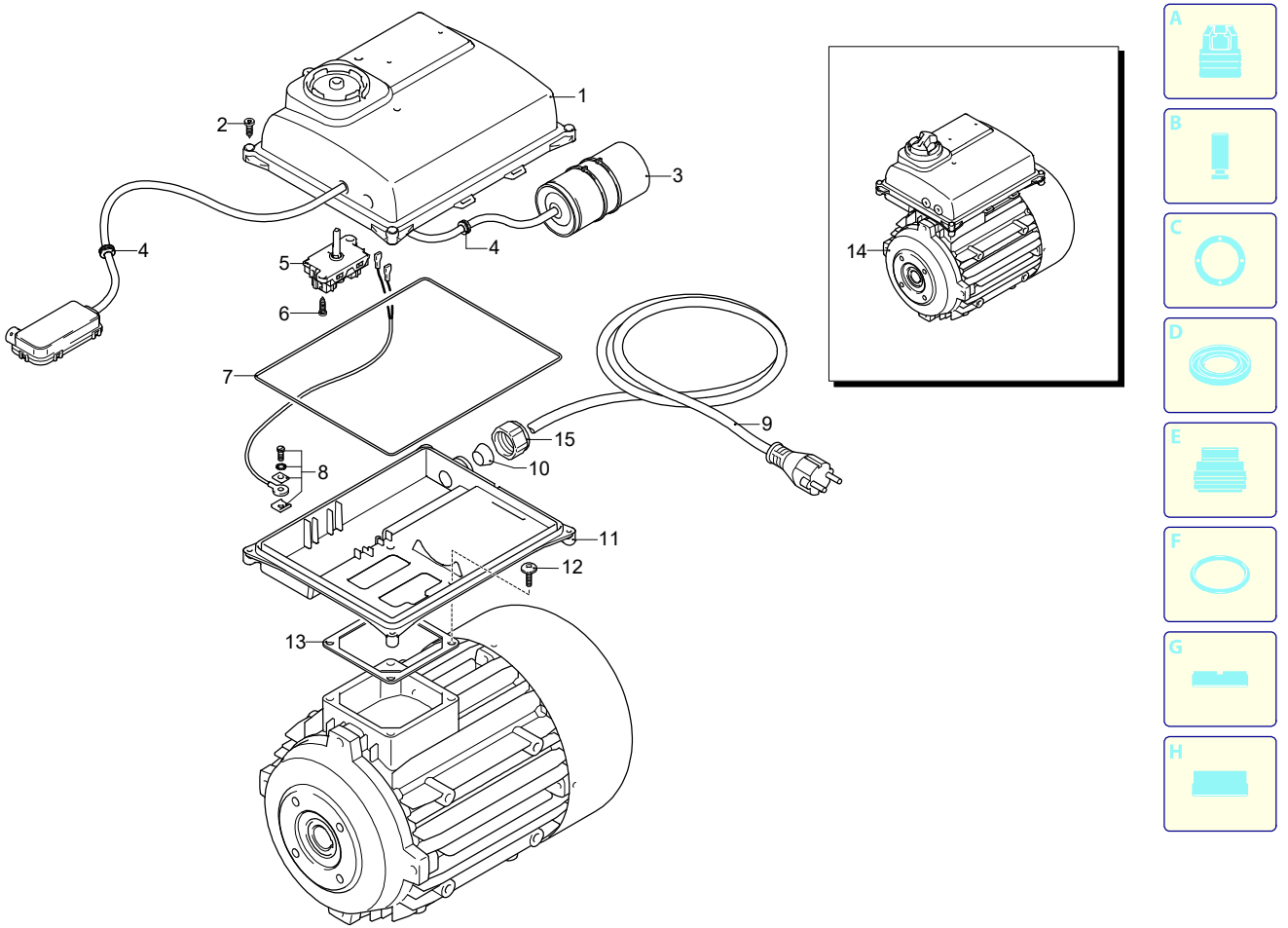

Validity	Pos.	Code	Description	Q
	1	3960740	Box	1
	2	2560720	Screw	4
	3	51182	Capacitor	1
	4	2021480	Gland	1
	5	2900420	Switch	1
	6	2000210	Screw	2
	7	3960650	O-ring	1
	8	1269100	Clamp	1
	9	3780630	Cable	1
	10	3960630	Gasket	1
	11	3960730	Plate	1
	12	3960980	Screw	4
	13	1700100	Gasket	1
	14	45077	Motor	1
	15	3960640	Cable gland	1

UN_CE_1861-AP

Model 930 TSS

Version:

Serial number:

Code: **14261**

08/03/2018

230 V - 50 Hz | **schuko**

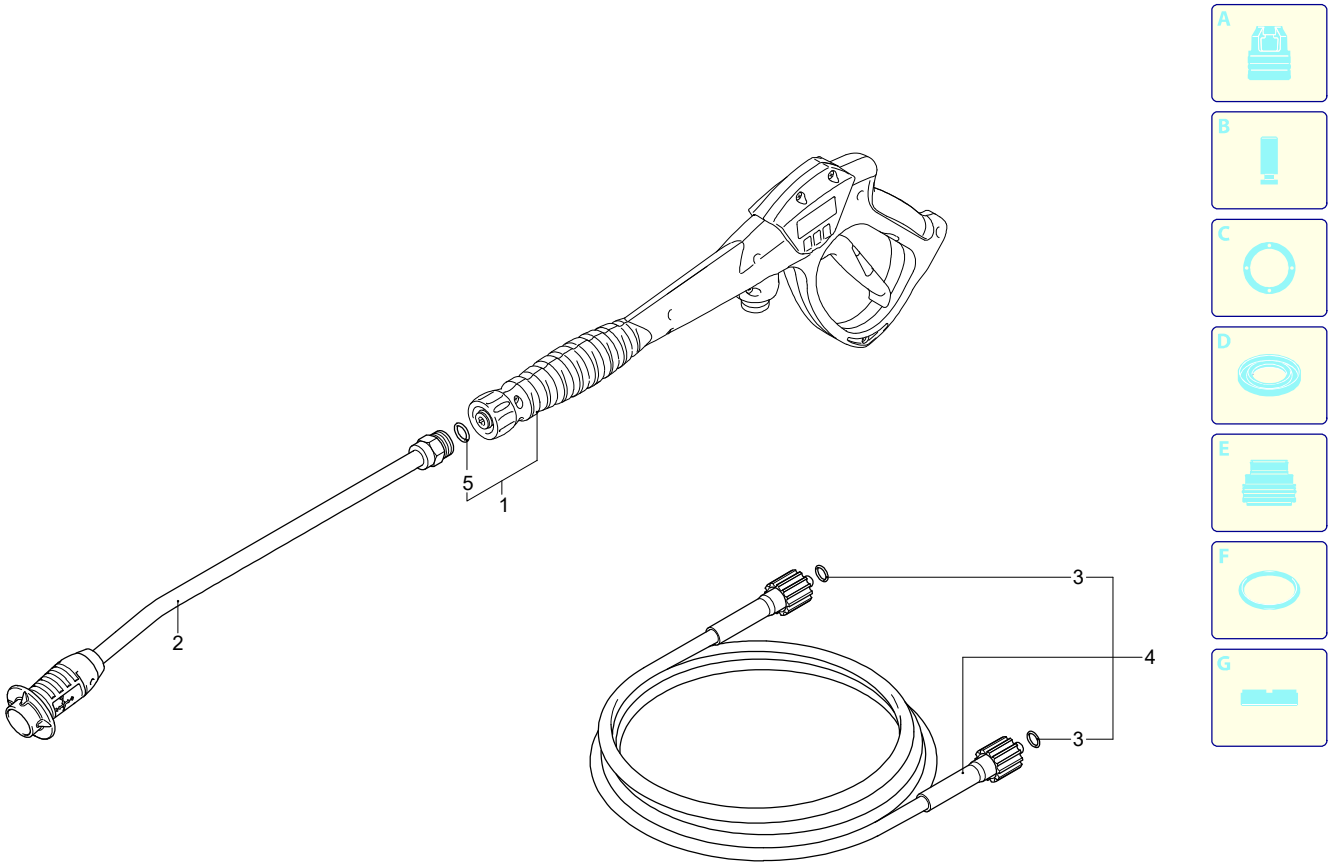

Validity	Pos.	Code	Description	Q
	1	43794	Gun	1
	2	41929	Lance	1
	3	2000570	O-ring	2
	4	3960970	High pressure hose	1
	5	391000	O-ring	1

UN_CE_1847-DP