BLUE CLEAN 1018

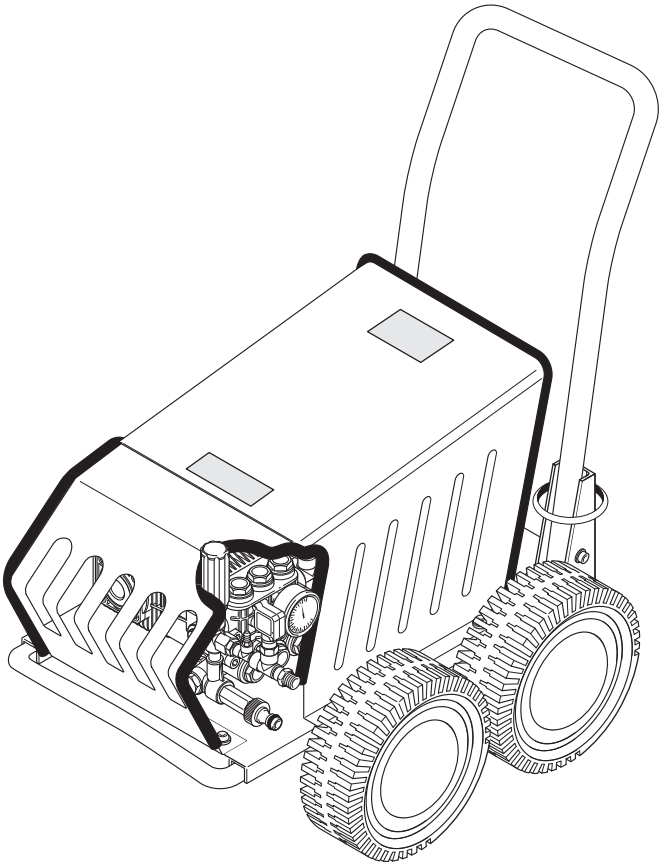

EN *Read this manual through carefully before installing/using the cleaner, paying special attention to the SAFETY INSTRUCTIONS*

cod. 91944 - CT

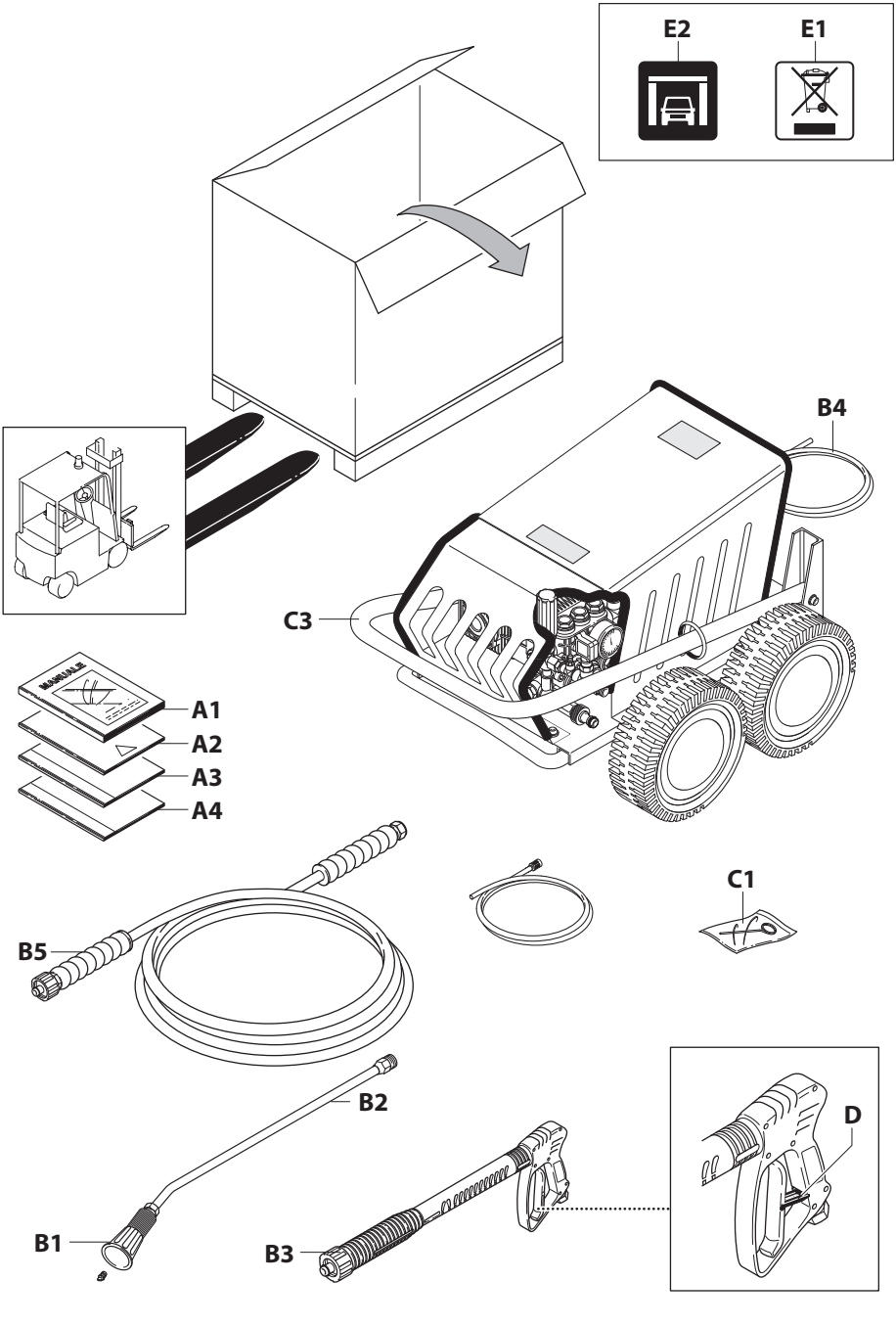
E2
E1
B4
C3
MANUALE
A1
A2
A3
A4
B5
C1
B2
B1
B3
D
1

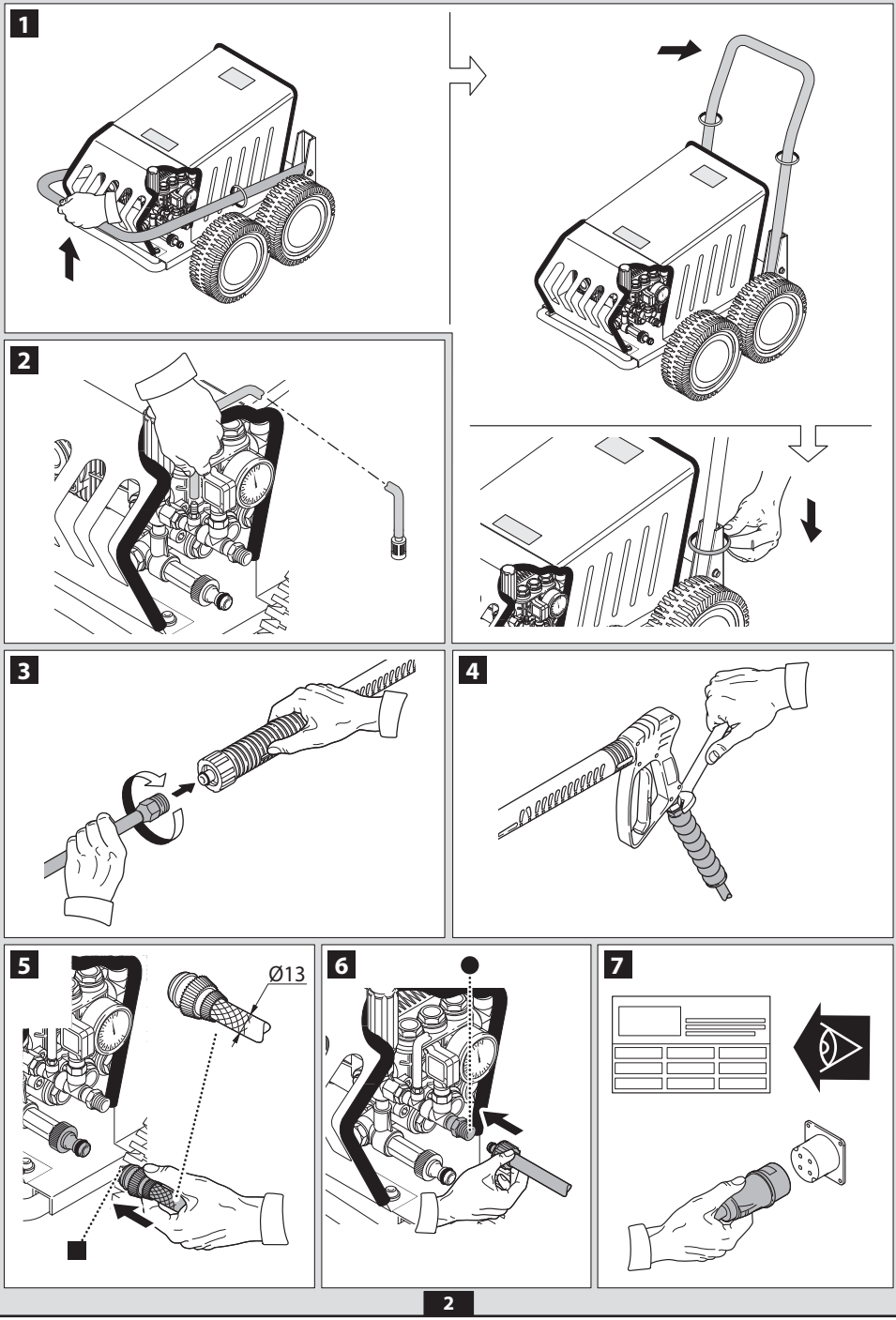
1
2
3
4
5
Ø13
6
7

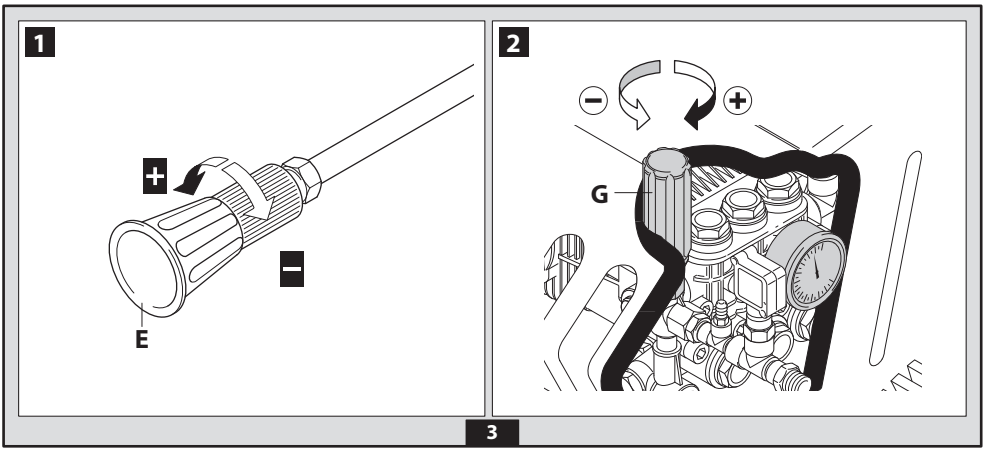
1
+
−
E
2
G
3

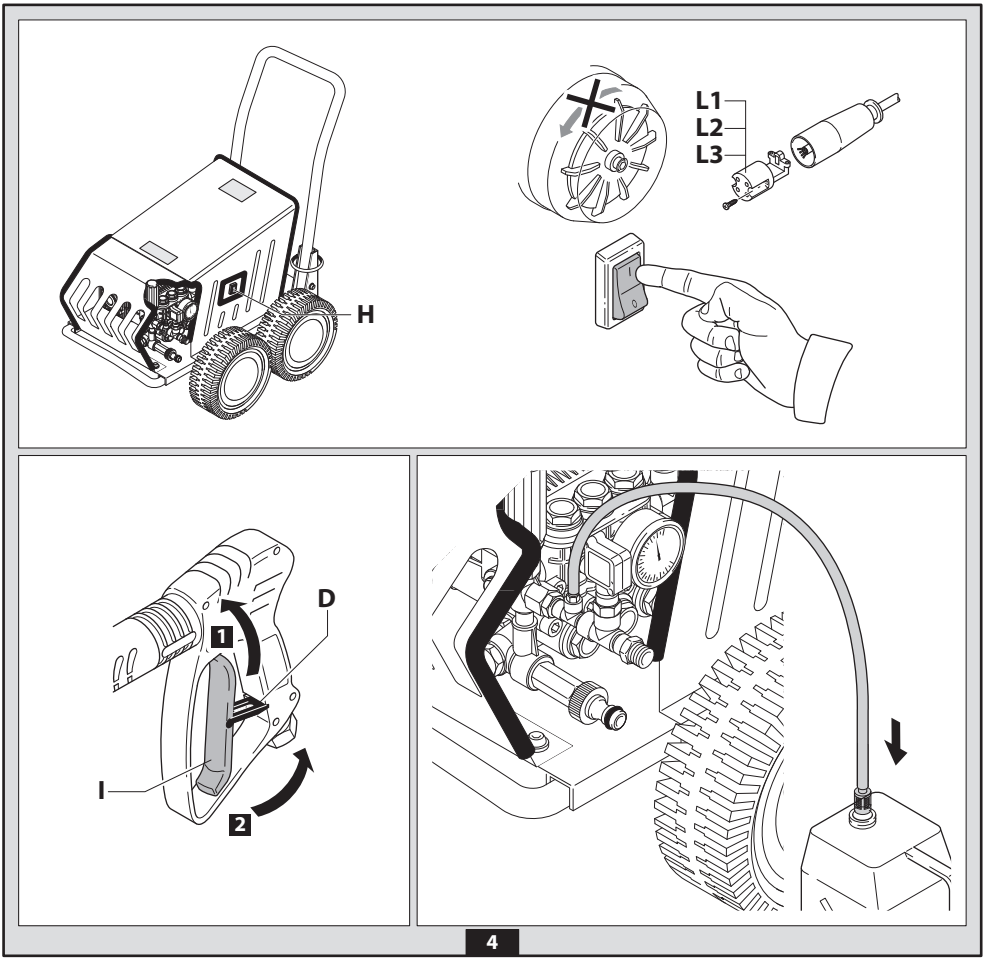
H
L1
L2
L3
D
1
I
2
4

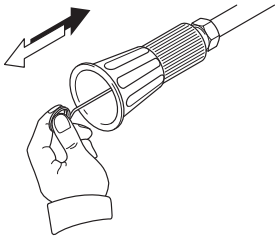

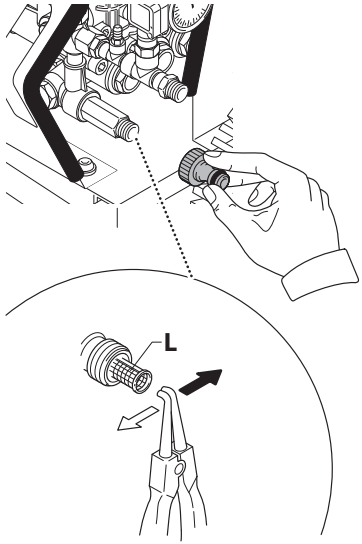

5

	Volt	⇨ 1 ÷ 25 m	⇨ 25 ÷ 50 m
	400	4 x 1,5 mm^2	4 x 2,5 mm^2

SCHEMA CIRCUITALE DI MONTAGGIO

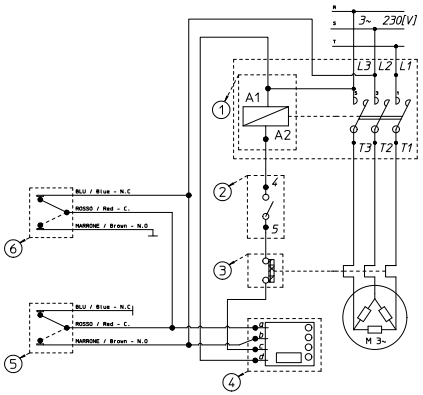

Legenda circuito :
1) Bobina comando di contattore 2360850
2) Interruttore di manovra 2360730
3) 3 pastiglie termiche Thermik S01-160-05
4) Scheda per ritardo accensione cod. 2360840
5) Pressostato TESTA (Pump head Pressure Switch)
6) Pressostato MANDATA (Pump head Pressure Switch)

ATTENZIONE:
Effettuare marcatura di riconoscimento sul pressostato di mandata

SCHEMA CIRCUITALE DI MONTAGGIO

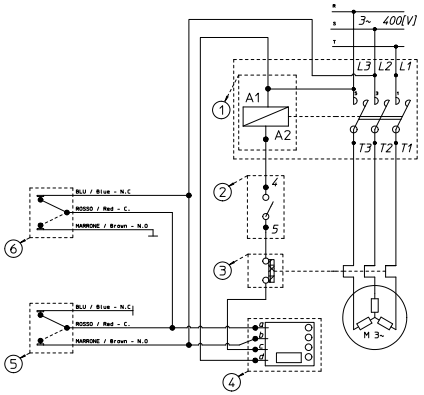

Legenda circuito :
1) Bobina comando di contattore 1700740
2) Interruttore di manovra 2360730
3) 3 pastiglie termiche Thermik S01-160-05
4) Scheda per ritardo accensione cod. 2360590
5) Pressostato TESTA (Pump head Pressure Switch)
6) Pressostato MANDATA (Pump head Pressure Switch)

ATTENZIONE:
Effettuare marcatura di riconoscimento sul pressostato di mandata

I

1 SAFETY INSTRUCTIONS

1.1 The appliance you have purchased is a technologically advanced product designed by one of the leading European manufacturers of high pressure pumps. To obtain the best performance from your unit, read this booklet carefully and follow the instructions each time you use it. During connection, use and servicing of the appliance, take all possible precautions to protect your own safety and that of the people in the immediate vicinity. Read the safety regulations carefully and comply with them on all occasions; failure to do so may put health and safety at risk or cause expensive damage.

2 SAFETY RULES/RESIDUAL RISKS

2.1 SAFETY "MUST NOTS"

2.1.1  **Explosion or poisoning hazard.** DO NOT use the appliance with inflammable or toxic liquids, or any products which are not compatible with the correct operation of the appliance.

2.1.2  **Injury hazard.** DO NOT direct the water jet towards people or animals.

2.1.3  **Electric shock hazard.** DO NOT direct the water jet towards the unit itself, electrical parts or towards other electrical equipment.

2.1.4  **Short circuit hazard.** DO NOT use the appliance outdoors when it is raining.

2.1.5  **Injury hazard.** DO NOT allow children or incompetent persons to use the appliance.

2.1.6  **Electric shock hazard.** DO NOT touch the plug and/or socket with wet hands.

2.1.7  **Electric shock and short circuit hazard.** DO NOT use the appliance if the electrical cable is damaged.

2.1.8  **Explosion hazard.** DO NOT use the appliance if the high pressure hose is damaged.

2.1.9  **Accident hazard.** DO NOT jam the trigger in the operating position.

2.1.10  **Accident hazard.** Check that the data plates are affixed to the appliance, if not, inform your dealer. Units without plates must NOT be used as they are unidentifiable and potentially dangerous.

2.1.11  **Explosion hazard.** DO NOT tamper with or adjust the setting of the safety valve or the safety devices.

2.1.12  **Hazardous alteration of operating performance.** DO NOT alter the original diameter of the spray head nozzle.

2.1.13  **Accident hazard.** DO NOT leave the appliance unattended.

2.1.14  **Short circuit hazard.** DO NOT move the appliance by pulling on the **ELECTRICAL CABLE**.

2.1.15 Make sure that cars do not drive over the high pressure hose.

2.1.16 **Explosion hazard.** DO NOT move the appliance by pulling on the high pressure hose.

2.1.17 **Explosion hazard.** When directed towards tyres, tyre valves or other pressurised components, the high pressure jet is potentially dangerous. Do not use the rotating nozzle kit, and always keep the jet at a distance of at least 30 cm during cleaning.

2.2 SAFETY "MUSTS"

2.2.1  **Short circuit hazard.** All electrical conductors MUST BE PROTECTED against the water jet.

2.2.2  **Electric shock hazard.** The appliance MUST ONLY BE CONNECTED to an adequate power supply in compliance with all applicable regulations (IEC 60364-1).

 The appliance may cause network noise DURING startup.

- Use of a safety residual current circuit-breaker (R.C.C.B.) will provide additional protection for the operator (30 mA).

Models supplied without plug must be installed by qualified staff.
Use only authorized electrical extension leads with suitable conductor gauge.

2.2.3  **Injury hazard.** High pressure may cause parts to rebound: wear all the protective clothing and equipment needed to ensure the operator's safety.

2.2.4  **Accidental start-up hazard.** Before doing work on the appliance, REMOVE the plug.

2.2.5  **Injury hazard.** Before pressing the trigger, GRIP the gun firmly to counteract the recoil.

2.2.6  **Contamination hazard.** COMPLY WITH the requirements of the local water supply company. According to DIN 1988, the appliance may only be connected to the mains drinking water supply if a backflow preventer valve with drain facility is installed in the supply hose.

2.2.7  **Accident hazard.** Maintenance and/or repair of electrical components MUST be carried out by qualified staff.

2.2.8  **Injury hazard.** DISCHARGE residual pressure before disconnecting the unit hose.

2.2.9  **Accident hazard.** Before using the appliance, CHECK every time that the screws are fully tightened and that there are no broken or worn parts.

2.2.10  **Explosion and electric shock hazard.** ONLY USE detergents which will not corrode the coating materials of the high pressure hose/electrical cable.

2.2.11  **Injury hazard.** ENSURE that all people or animals keep a minimum distance of 16 yd. (15m) away.

EN

3 GENERAL INFORMATION (FIG.1)/PAGE.3

3.1 Use of the manual

This manual forms an integral part of the appliance and should be kept for future reference. Please read it carefully before installing/using the unit. If the appliance is sold, the Seller must pass on this manual to the new owner along with the appliance.

3.2 Delivery

The appliance is delivered partially assembled in a cardboard box.

The supply package is illustrated in fig.1.

3.2.1 Documentation supplied with the appliance

A1 Use and maintenance manual
A2 Safety instructions
A3 Declaration of conformity
A4 Warranty regulations

3.3 Disposing of packaging

The packaging materials are not environmental pollutants but must still be recycled or disposed of in compliance with the relevant legislation in the country of use.

3.4 Safety signs

Comply with the instructions provided by the safety signs fitted to the appliance.

Check that they are present and legible; otherwise, fit replacements in the original positions.

E1 symbol – Indicates that the appliance **must not be disposed of** as municipal waste; it may be handed in to the dealer on purchase of a new appliance. The appliance's electrical and electronic parts must not be reused for improper uses since they contain substances which constitute health hazards.

E2 symbol – Indicates that the appliance is intended for professional use, i.e. for experienced people informed about the relative technical, regulatory and legislative aspects and capable of performing the operations necessary for the use and maintenance of the appliance.

E3 symbol – Indicates that the appliance is intended for non-professional (domestic) use.

4 TECHNICAL INFORMATION (FIG.1)/PAGE.3

4.1 Envisaged use

This appliance has been designed for individual use for the cleaning of vehicles, machines, boats, masonry, etc, to remove stubborn dirt using clean water and biodegradable chemical detergents.

Vehicle engines may be washed only if the dirty water is disposed of as per regulations in force.

- Intake water temperature: **see data plate on the appliance**.
- Intake water pressure: **min. 0,1MPa-max 1MPa.**
- Operating ambient temperature: **above 0°C**.

The appliance is compliant with the EN 60335-2-79/A1 standard.

4.2 Operator

The symbol on the front cover identifies the appliance's intended operator (professional or non-professional).

4.3 Improper use

Use by unskilled persons or those who have not read and understood the instructions in the manual is forbidden.

The introduction of inflammable, explosive and toxic liquids into the appliance is prohibited.

Use of the appliance in a potentially inflammable or explosive atmosphere is forbidden.

The use of non-original spare parts and any other spare parts not specifically intended for the model in question is prohibited.

All modifications to the appliance are prohibited. Any modifications made to the appliance shall render the Declaration of Conformity null and void and relieve the manufacturer of all liability under civil and criminal law.

4.4 Main components

B1 Adjustable spray nozzle
B2 Lance
B3 Gun with safety catch
B4 Power supply cable with plug
B5 High pressure hose
B6 Detergent tank (on models with this feature)

4.4.1 Accessories (if included in the supply package – see fig.1).

C1 Nozzle cleaning tool
C2 Rotating nozzle kit
C3 Handle
C4 Brush
C5 Hose reel
C6 Water suction kit
C7 Pipe drain kit
C8 Large surface cleaning tool
C9 Adapter

4.5 Safety devices

Caution - Danger!

Do not tamper with or adjust the safety valve setting.

- Safety valve and/or pressure limiting valve.
  The safety valve is also a pressure limiting valve.
  When the gun trigger is released, the valve opens and the water recirculates through the pump inlet or is discharged onto the ground.
- **Thermostat valve** (**D1** where fitted)
  If the water temperature exceeds the temperature set by the manufacturer, the thermostat valve discharges the hot water and draws in an amount of cold water equal to the amount of water discharged, until the correct temperature is restored.
- Safety catch (**D**): prevents accidental spraying of water.

5 INSTALLATION (FIG.2)/PAGE.4

5.1 Assembly

Caution - Danger!

All installation and assembly operations must be performed with the appliance disconnected from the mains power supply.

The assembly sequence is illustrated in **fig.2**.

5.2 Assembling the rotating nozzle

(For models with this feature)

The rotating nozzle kit delivers greater washing power.

Use of the rotating nozzle may cause of reduction in pressure of 25% compared to the pressure obtained with the adjustable nozzle. However, the rotating nozzle kit delivers greater washing power due to the rotation of the water jet.

5.3 Electrical connection

Caution - Danger!

Check that the electrical supply voltage and frequency (V-Hz) correspond to those specified on the appliance data plate (fig.2). The appliance should only be connected to a mains power supply equipped with an adequate earth connection and a differential security breaker (30 mA) to cut off the electricity supply in the instance of a short circuit.

5.3.1 Use of extension cables

Use cables and plugs featuring "IPX5" protection level.

The cross-section of the extension cable should be proportionate to its length; the longer it is, the greater its cross-section should be. See table I/PAGE 6.

5.4 Water supply connection

Caution - Danger!

Only clean or filtered water should be used for intake. The delivery of the water intake tap should be equal to that of pump capacity.

Place the appliance as close to the water supply system as possible.

5.4.1 Connection points

● Water outlet (OUTLET)
■ Water inlet with filter (INLET)

5.4.2 Connection to the mains water supply

The appliance can be connected directly to the mains drinking water supply only if the supply hose is fitted with a backflow pre-

EN

venter valve as per current regulations in force. Make sure that the hose is at least Ø 13 mm and that it is reinforced.

6 ADJUSTMENT INFORMATION (FIG.3)/PAGE.5

6.1 Adjusting the spray nozzle (for models with this feature)
Water flow is adjusted by regulating the nozzle (**E**).

6.2 Adjusting the detergent (on models with this feature)
Detergent flow is adjusted using the regulator (**F**).

6.3 Adjusting the detergent pressure
Set the adjustable nozzle (**E**) on " ▬ " to deliver detergent at the correct pressure (on models with this feature).

6.4 Adjusting the pressure (on models with this feature)
The regulator (**G**) is used to adjust the working pressure. The pressure is shown on the pressure gauge (where fitted).

7 INFORMATION ON USE OF THE APPLIANCE (FIG.4)/PAGE.5

7.1 Controls
- Starter device (**H**).

Set the starter switch on (ON/1) to:
a) start the motor (in models without TSS device);
b) set the motor ready to start (in models with TSS device).
If there is a pilot light on the starter device, it should light up.
If the "low/high" settings are available, use them as follows:
Low : low pressure washing
High : high pressure washing
Set the starter device switch on (OFF/0) to shut down the appliance.
If there is a pilot light on the starter device, it should go out.
- Water jet control lever (**I**).

Caution - Danger!
During operation the appliance must be positioned as shown in fig. 4 on a sturdy, stable surface.

7.2 Start-up
1) Turn on the water supply tap fully.
2) Release the safety catch (**D**).
3) Depress the gun trigger for a few seconds and start up the appliance using the starter device (ON/1).

Caution - Danger!
Before starting up the appliance check that the water supply hose is connected properly; use of the appliance without water will damage it; do not cover the ventilation grilles when the appliance is in use.

TSS models - In TSS models with automatic delivery flow cut-off system:
- when the gun trigger is **released** the dynamic pressure automatically cuts out the motor (see fig.4);
- when the gun trigger is **depressed** the automatic drop in pressure starts the motor and the pressure is restored after a very slight delay;
- if the TSS is to function correctly all gun **releasing** and **depressing** operations must be performed at intervals of **less** than 4-5 seconds.

On three-phase models **for professional use**: at first use, start the appliance for a very short time to check that the motor is running in the correct direction. If the motor fan is turning anti-clockwise, exchange two of the three phase wires (L1, L2, L3) in the electrical plug.

To prevent damage to the appliance, do not allow it to operate dry and when running do not stop the water jet for more than 10 minutes at a time (for models without TSS device).

7.3 Stopping the appliance
1) Set the starter device switch on (OFF/0).
2) Depress the gun trigger and discharge the residual pressure inside the hoses.
3) Engage the gun safety catch (**D**).

7.4 Restarting
1) Release the safety catch (**D**).
2) Depress the gun trigger and discharge the residual air inside the hoses.
3) Set the starter device on (ON/1).

7.5 Storage
1) Switch the appliance off (OFF/0).
2) Remove the plug from the socket.
3) Turn off the water supply tap.
4) Discharge the residual pressure from the gun until all the water has come out of the nozzle.
5) Drain and wash out the detergent tank at the end of the working session. To wash out the tank, use clean water instead of the detergent.
6) Engage the gun safety catch (D).

7.6 Refilling and using detergent
When using detergent, the adjustable nozzle must be set on " ▬ " (on models with this feature).
Use of a high pressure hose longer than the one originally supplied with the cleaner, or the use of an additional hose extension, may reduce or completely halt the intake of detergent.
Fill the tank with highly degradable detergent.

7.7 Recommended cleaning procedure
Dissolve dirt by applying the detergent mixed with water to the surface while still dry.
When dealing with vertical surfaces work from the bottom upwards. Leave the detergent to act for 1-2 minutes but do not allow the surface to dry. Starting from the bottom, use the high pressure jet at a minimum distance of 30 cm. Do not allow the rinse water to run onto unwashed surfaces.
In some cases, scrubbing with brushes is needed to remove dirt.
High pressure is not always the best solution for good washing results, since it may damage some surfaces. The finest adjustable nozzle jet setting or the rotopower nozzle should not be used on delicate or painted parts, or on pressurised components (e.g tyres, inflation valves, etc.).
Effective washing depends on both the pressure and volume of the water used, to the same degree.

8 MAINTENANCE (FIG.5)/PAGE.6

Any maintenance operations not covered by this chapter should be carried out by an Authorized Sales and Service Centre.

Caution - Danger!
Always disconnect the plug from the power socket before carrying out any work on the appliance.

8.1 Cleaning the nozzle
1) Disconnect the lance from the nozzle.
2) Remove any dirt deposits from the nozzle hole using the tool (**C1**).

8.2 Cleaning the filter
Inspect the intake filter (**L**) and detergent filter (if fitted) before each use, and clean in accordance with the instructions if necessary.

8.3 Unjamming the motor (on models with this feature)
In case of lengthy stoppages, limescale sediments may cause the motor to seize. To unjam the motor, turn the drive shaft with a tool (**M**).

8.4 End-of-season storage
Treat the appliance with non-corrosive, non-toxic antifreeze before storing it away for winter.
Put the appliance in a dry place, protected from frost.

EN

9 TROUBLESHOOTING

Problem	Possible causes	Remedy
Pump does not reach working pressure	Nozzle worn	Replace nozzle
	Water filter fouled	Clean filter (**L**) (fig.5)
	Water supply pressure low	Turn on water supply tap fully
	Air being sucked into system	Check tightness of hose fittings
	Air in pump	Switch off the appliance and keep depressing and releasing the gun trigger until the water comes out in a steady flow. Switch the appliance back on again.
	Adjustable nozzle not positioned correctly	Turn the adjustable nozzle (**E**) (+) (fig.3)
	Thermostatic valve tripped	Wait for correct water temperature to be restored
Pressure drops during use	Water intake from external tank	Connect appliance to the mains water supply
	Intake water too hot	Reduce temperature
	Nozzle clogged	Clean nozzle (fig.5)
	Intake filter (**L**) dirty	Clean filter (**L**) (fig.5)
Motor "sounds" but fails to start	Insufficient power supply	Check that the voltage of the mains power supply line is the same as that on the plate (fig.2)
	Voltage loss due to use of extension cable	Check characteristics of extension cable
	Appliance not used for a long period of time	Contact your nearest Authorized Service Centre
	Problems with TSS device	Contact your nearest Authorized Service Centre
Motor fails to start	No electrical power	Check that the plug is firmly in the socket and that the mains voltage supply is present (*)
	Problems with TSS device	Contact your nearest Authorized Service Centre
	Appliance not used for a long period of time	Using the tool (**M**) unjam the motor from the hole at the rear of the appliance (in models with this feature) (fig.5)
Water leakage	Seals worn	Have the seals replaced at your nearest Authorized Service Centre
	Safety valve tripped and discharging	Contact an Authorized Service Centre
Appliance noisy	Water too hot	Reduce temperature (see technical data
Oil leakage	Seals worn	Contact your nearest Authorized Service Centre
TSS versions only: motor starts even with gun trigger is released	High pressure system or pump hydraulic circuit not watertight	Contact your nearest Authorized Service Centre
TSS versions only: no water delivery when gun trigger is depressed (with supply hose connected)	Nozzle clogged	Clean nozzle (fig.5)
No detergent taken in	Adjustable nozzle on high pressure setting	Set nozzle on " − " setting (fig.3)
	Detergent too dense	Dilute with water
	High pressure hose extension being used	Fit original hose
	Deposits or restriction in detergent circuit	Flush with clean water and eliminate any restrictions. If the problem persists, contact an Authorized Service Centre

(*) If the motor starts and does not restart during operation, wait 2-3 minutes before repeating the start-up procedure (**overload cutout has been tripped**). If the problem recurs more than once, contact your nearest Authorized Service Centre.

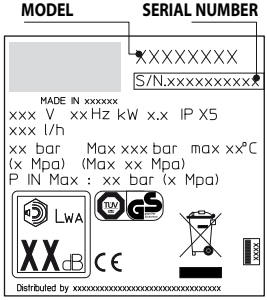

EN

EN EC Declaration of conformity

We Annovi Reverberi S.p.A., Bomporto (Mo),Italy declare that the following AR Blue Clean Machine(s):

Designation of Machine	High Pressure Washer
Model No / Type	1018
Input power	7,4 kW

Conforms to the following European Directives:
2006/42/EC, 2006/95/EC, 2002/95/EC, 2002/96/EC, 2004/108/EC, 2000/14/EC

And are manufactured in accordance to the following standards or standardised documents: EN 60335-1; EN 60335-2-79; EN 55014-1; EN 55014-2; EN 61000-3-2; EN 61000-3-3; EN 61000-3-11; EN 60704-1
Name and address of the person in charge to give the technical file:
Stefano Reverberi / AR Managing Director
Via M. L. King, 3 - 41122 Modena, Italy

The conformity assessment procedure required by Directive 2000/14/EC was in accordance with annex V

Measured Sound

Power Level: 92 dB (A)
Guaranteed Sound
Power Level: 93 dB (A)

Date : 25.10.2011
MODENA (I)
Stefano Reverberi Managing Director

Technical Data

Technical Data (EN)	Unit	1018
Output	l/min	15
Pressure	MPa	19
Maximum pressure	MPa	20
Power	kW	7,4
T° input	°C	60
Maximum input pressure	MPa	1
Repulsive force of the gun to the maximum pressure	N	43,7
Motor Insulation	-	Class F
Motor Protection	-	IPX5
Voltage	V/Hz	400/50
Maximum allowed net impedance	Ω	-
Sound level K = 3 dB(A) :		
L_{pA} (EN 60704-1)	dB (A)	84,9
L_{WA} (EN 60704-1)	dB (A)	93
Unit vibrations K = 1,5 m/s^2 :	m/s^2	1,4
Weight	kg	74

Subject to technical modifications!

(EN) WARRANTY

The duration of the warranty is in accordance with the relevant legislation in the country where the product is sold (unless otherwise stated by the producer).
The warranty covers materials, construction and conformity defects during the warranty period, during which time the manufacturer will replace defective parts and repair or replace the product if excessively worn in normal use.
The warranty does not cover components subject to normal wear (valves, pistons, water gasket, oil gasket, springs, O-rings, accessories such as hoses, guns, brushes, wheels, etc.).
The warranty does not cover defects caused by or resulting from:
- incorrect use, abuse or neglect,
- trade, professional or hire use,
- failure to service and maintain the unit as specified in the user's manual,
- unauthorised repairs,
- use of non-original accessories/spare parts,
- damage incurred during shipping or due to foreign objects or substances and accidental damage,
- warehousing and stock keeping problems.

To register the warranty, the customer must provide proof of purchase.

For service, contact the dealership where the machine was purchased

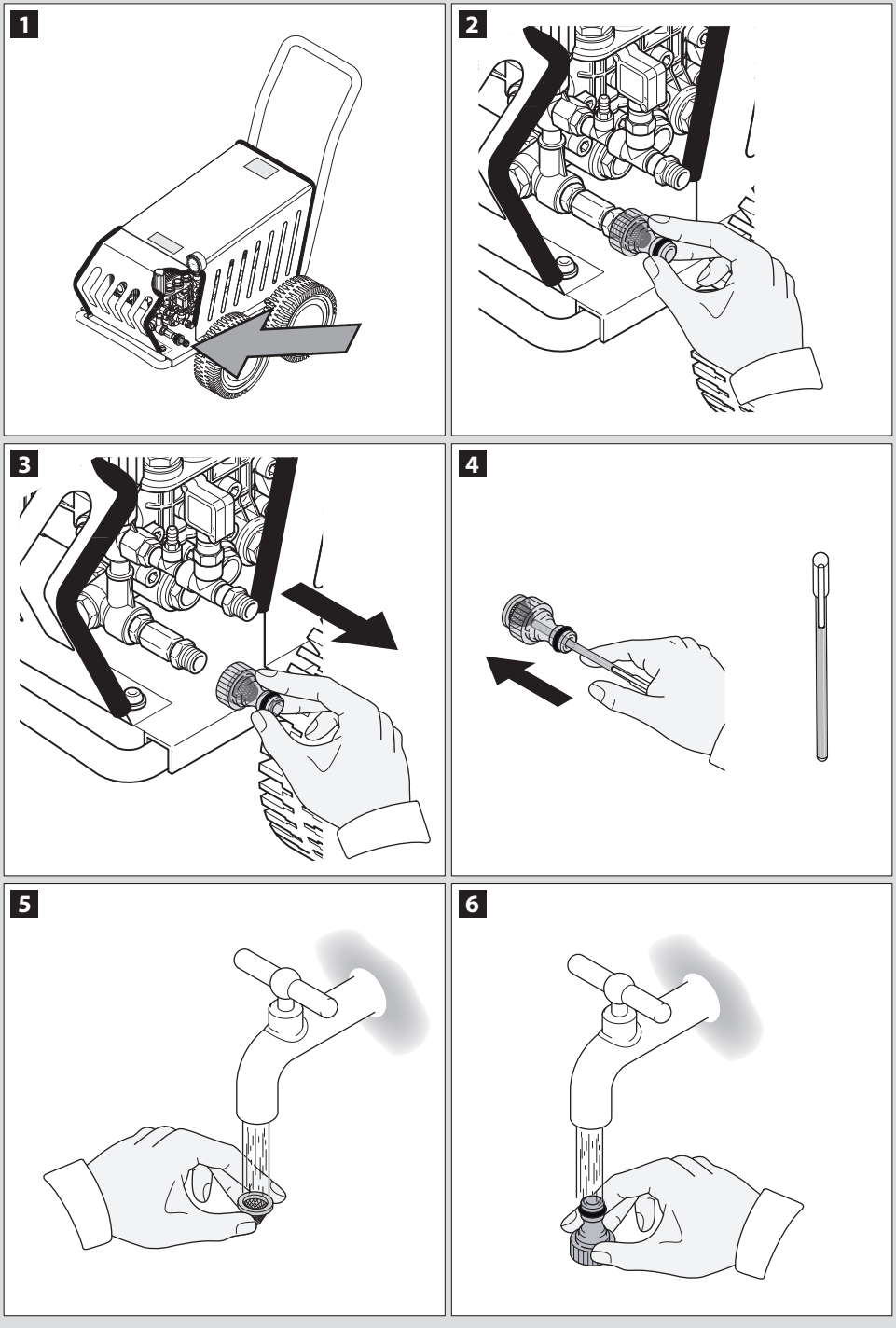
1
2
3
4
5
6