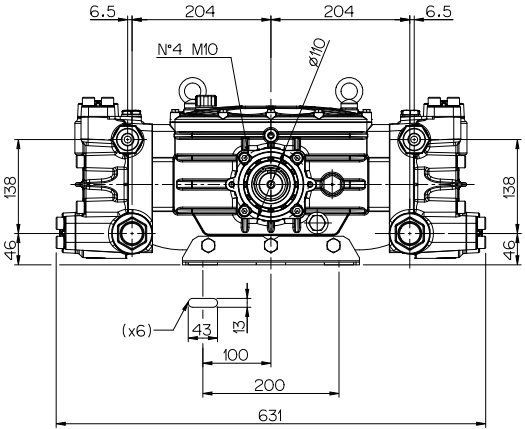
6.5
204
204
6.5
N°4 M10
ø110
138
138
46
46
(x6)
43
13
100
200
631

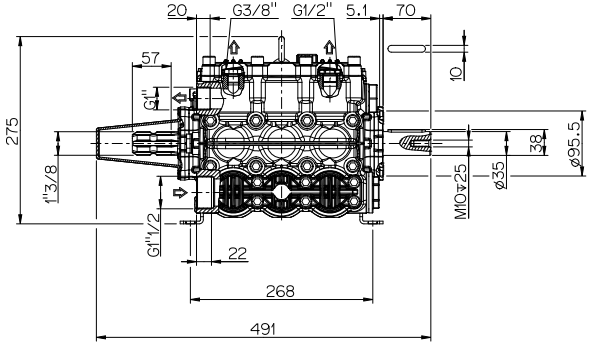
20
G3/8"
G1/2"
5.1
70
57
G1"
10
275
38
ø95.5
1"3/8
M10↧25
ø35
G1"1/2
22
268
491