RBC 122K 8900.11

GAS ENGINE GEAR REDUCTION FOR B/BK/BS/BWT/C/CS/CWT/CK/CX-SERIES PLUNGER PUMPS on GAS ENGINES with 1" SHAFTS

REQUIRES 11.5 OZ. ISO VG 220 GEAR LUBE

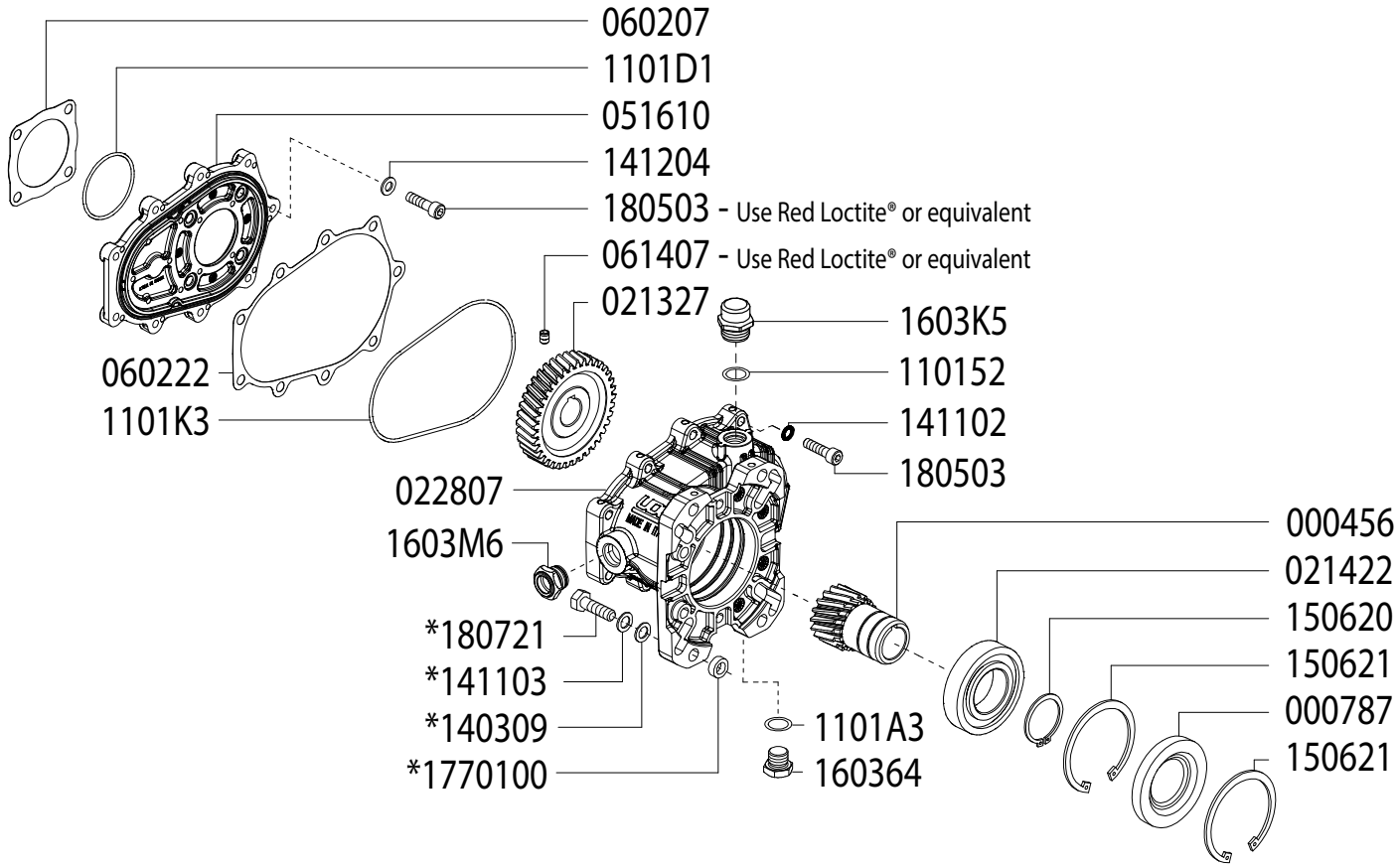

SEE NEXT PAGE FOR ASSEMBLY AND INSTALLATION INSTRUCTIONS

Updated 11-19-2026

Part #	Description	Qty
0004.56	GEAR – 1"	1
0007.87	OIL SEAL - D40 - RBC122K	1
0213.27	PUMP GEAR	1
0214.22	BEARING - D40 – RBC122K	1
0228.07	COUPLER – RBC122	1
0516.10	FLANGE – RBC122	1
0602.07	GASKET – RC122	1
0602.22	GASKET – RBC122 HOUSING	1
0614.07	SET SCREW – M5X8 - Use Red Loctite®	1
1101.52	O-RING - OIL PLUG	1
1101.A3	O-RING	1
1101.D1	O-RING	1
1101.K3	O-RING	1

Part #	Description	Qty
*1403.09	WASHER	4
1411.02	WASHER	9
*1411.03	SERRATED WASHER	4
1412.04	WASHER	4
1506.20	SNAP RING - D40	1
1506.21	SNAP RING - D80	2
1603.64	PLUG – 3/8"	1
1603.K5	OIL PLUG – G3/8"	1
1603.M6	OIL SIGHT GLASS	1
1805.03	ALLEN BOLT – M8x30 - Use Red Loctite®	13
*1807.21	HEX BOLT - 3/8-16 X 1-1/4"	4
*17701.00	SPACER	4

* For use when using outer mounting holes only

RBC 122K 8900.11

GAS ENGINE GEAR REDUCTION FOR
B/BK/BS/BWT/C/CS/CWT/CK/CX-SERIES PLUNGER PUMPS
on GAS ENGINES with 1" SHAFTS
REQUIRES 11.5 OZ. ISO VG 220 GEAR LUBE

ASSEMBLY INSTRUCTIONS

1 With the pump shaft in vertical position, remove the 4 bolts that affix the bearing flange, leaving it in its position.

2 Place the gasket (p/n 060207) on the pump flange and the O-Ring 1101D1 between the pump and the flange (p/n 051610), then attach the flange (p/n 051610) using the Allen Bolts (p/n 180503) with relative bonded seal washers (p/n 141204). Make sure that the O-Ring (p/n 1101K3) is correctly contained in its seat and position the gasket (p/n 060222). Apply Red LOCTITE® (or equivalent) to the bolts (p/n 180503), and tighten with a torque of 19 lb-ft MAX.

3 After checking that the key is correctly seated, fit the helical pinion (p/n 021327) on the pump shaft pushing it against the shaft stop and locking it in position with the set screw (p/n 061407), tightening with a torque of 15 lb-ft max (use Red LOCTITE® or equivalent).

4 Complete the assembly of the gearbox crankcase by screwing the oil sight glass (p/n 1603M6) and the plug (p/n 160364) with the corresponding O-Ring (p/n 1101A3).

5 Attach the gearbox crankcase assembly to the flange using the (9) Allen Bolts (p/n 180503) and washers (p/n 141102), tightening with a torque of 19 lb-ft MAX.

6. Fill the gearbox crankcase with oil (11.5 OZ. ISO VG 220 GEAR LUBE) until the level indicated in the center of the oil sight glass, then closing with the oil plug p/n 1603K5 and O-Ring (p/n 110152).

   Note: If the pump-gearbox unit is not immediately coupled to the engine and have to be transported, to avoid possible oil leaks, temporarily use a plug G3/8 (not supplied) instead of the oil plug (p/n 1603K5).

ASSEMBLY OF THE PUMP-GEARBOX UNIT ON THE ENGINE:

1 Check that the key of the motor shaft is correctly seated, then apply a good anti-seize lubricant (such as LOCTITE® 8150) to the shaft to facilitate disassembly.

2 Then proceed to the coupling of the gearbox to the engine using the appropriate bolts and washers (supplied)

3 Tightening torques according to the bolts used.

   3/8" - torque = 29 lb-ft MAX
   5/16" - torque =19 lb-ft MAX