UDOR WATER POWER

Serie / *Series*

PENTA

880400

PUMP PENTA-C 43/300 R

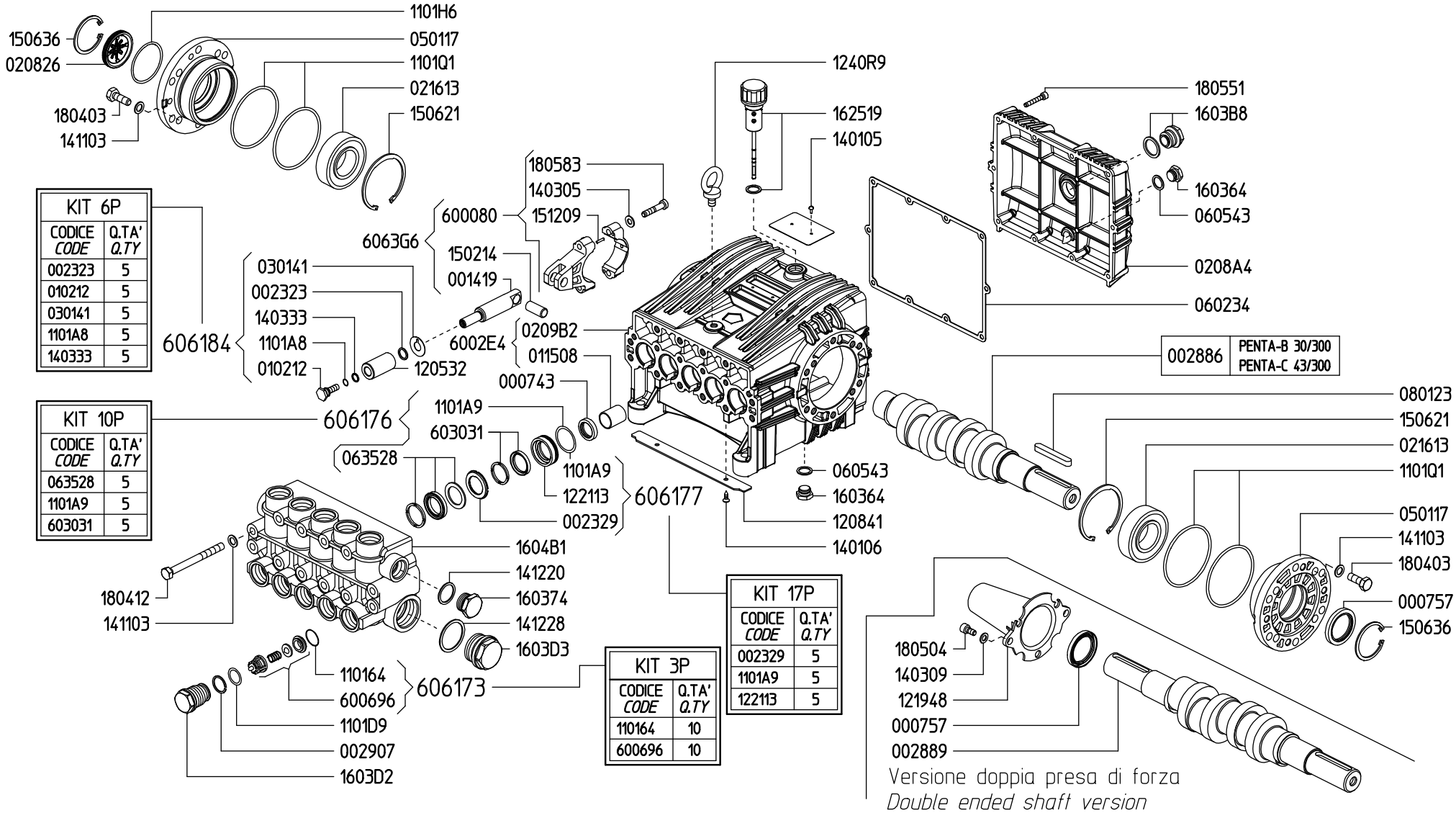

Rev.24-00