UDOR WATER POWER

Serie / *Series*

# ZETA 70

## *845100*

## *PUMP ZETA 70 1C*

| KIT 616 | | KIT 641 | | KIT 547 | |
|---|---|---|---|---|---|
| 6062B8 | | 6062D8 | | 606248 | |
| ✱ | | ■ | | ● | |
| CODICE *CODE* | Q.TA' *Q.TY* | CODICE *CODE* | Q.TA' *Q.TY* | CODICE *CODE* | Q.TA' *Q.TY* |
| 090315 | 3 | 110127 | 6 | 010204 | 3 |
| 110127 | 6 | 6063Q5 | 6 | 030143 | 3 |

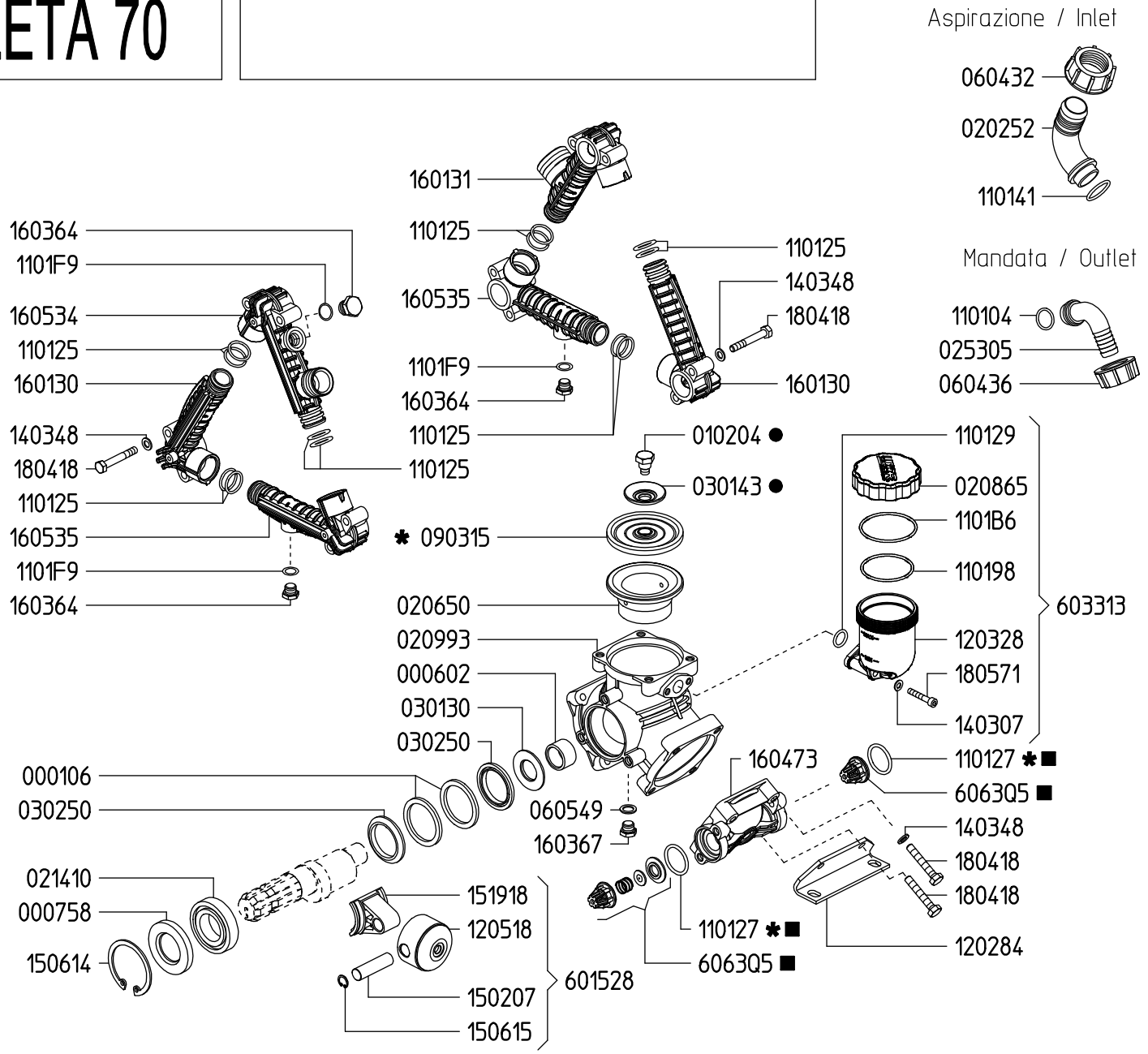


## VERSIONI / *VERSIONS*

### ZETA 70 1C

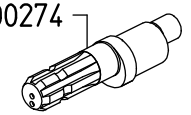


### ZETA 70 TS 1C

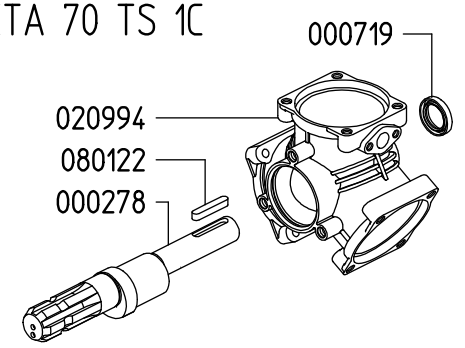


### ZETA 70 MI-1"

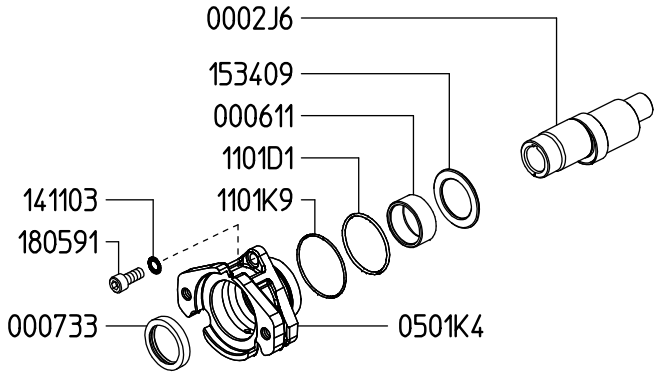


### ZETA 70 GR

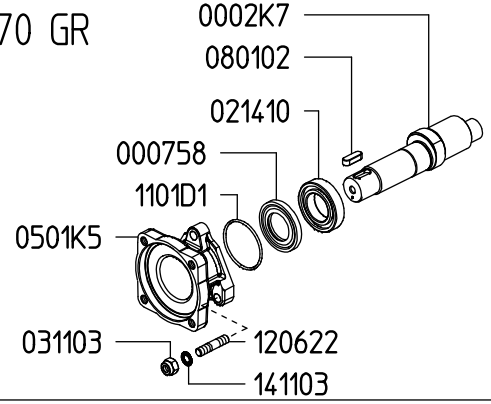


Rev.26-01