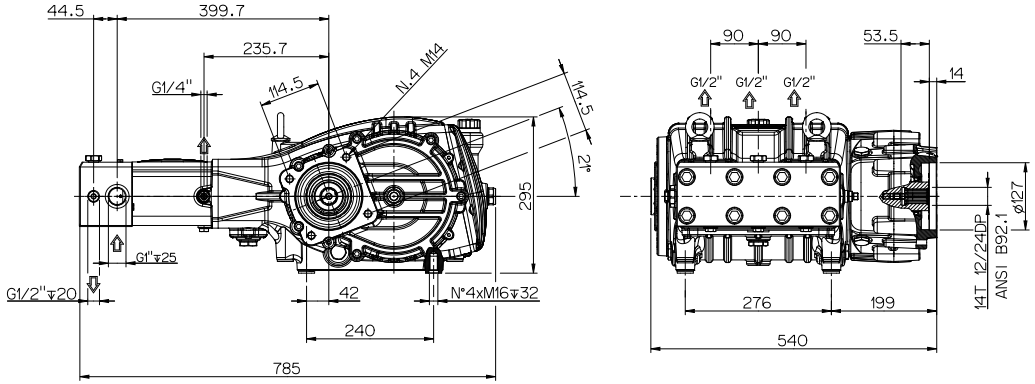
44.5
399.7
235.7
G1/4"
14.5
N.4 M14
14.5
21°
295
G1"∓25
G1/2"∓20
42
N°4xM16∓32
240
785
90
90
53.5
14
G1/2"
G1/2"
G1/2"
14T 12/24DP
ANSI B92.1
ø127
276
199
540