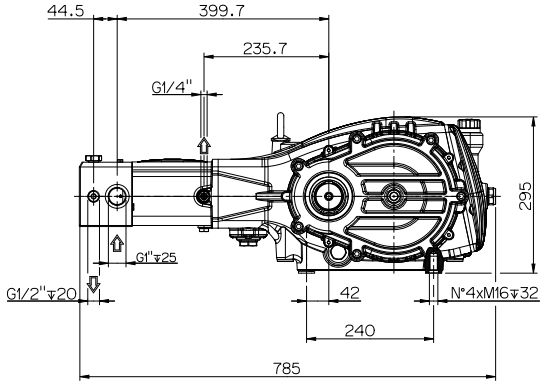
44.5
399.7
235.7
G1/4"
295
G1"∓25
G1/2"∓20
42
N°4xM16∓32
240
785

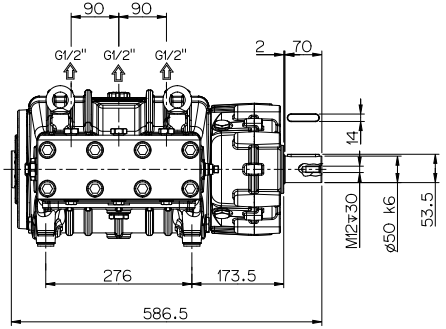
90
90
G1/2"
G1/2"
G1/2"
2
70
14
M12∓30
ø50 k6
53.5
276
173.5
586.5