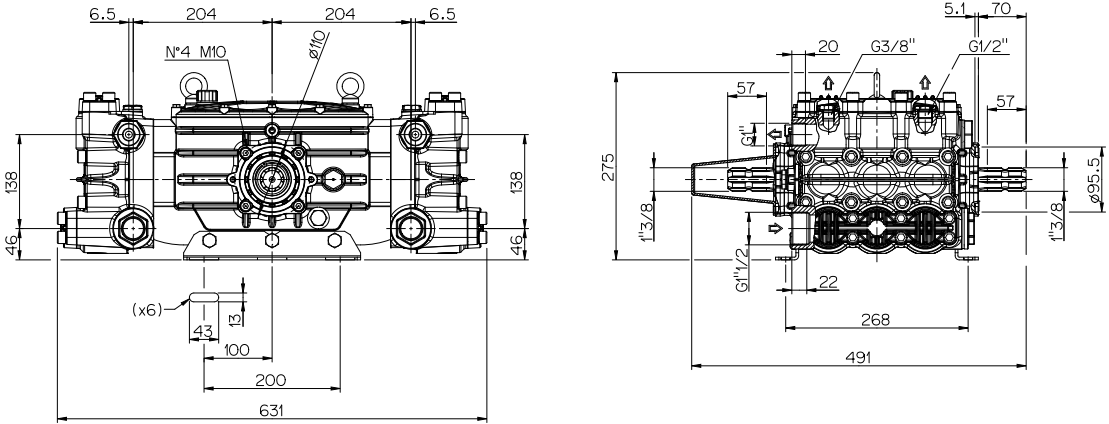
6.5
204
204
6.5
N°4 M10
Ø10
138
138
46
46
(x6)
13
43
100
200
631
5.1
70
20
G3/8"
G1/2"
57
57
G1"
275
1"3/8
1"3/8
Ø95.5
G1"1/2
22
268
491