Hose reel COD. 41681 - 41678

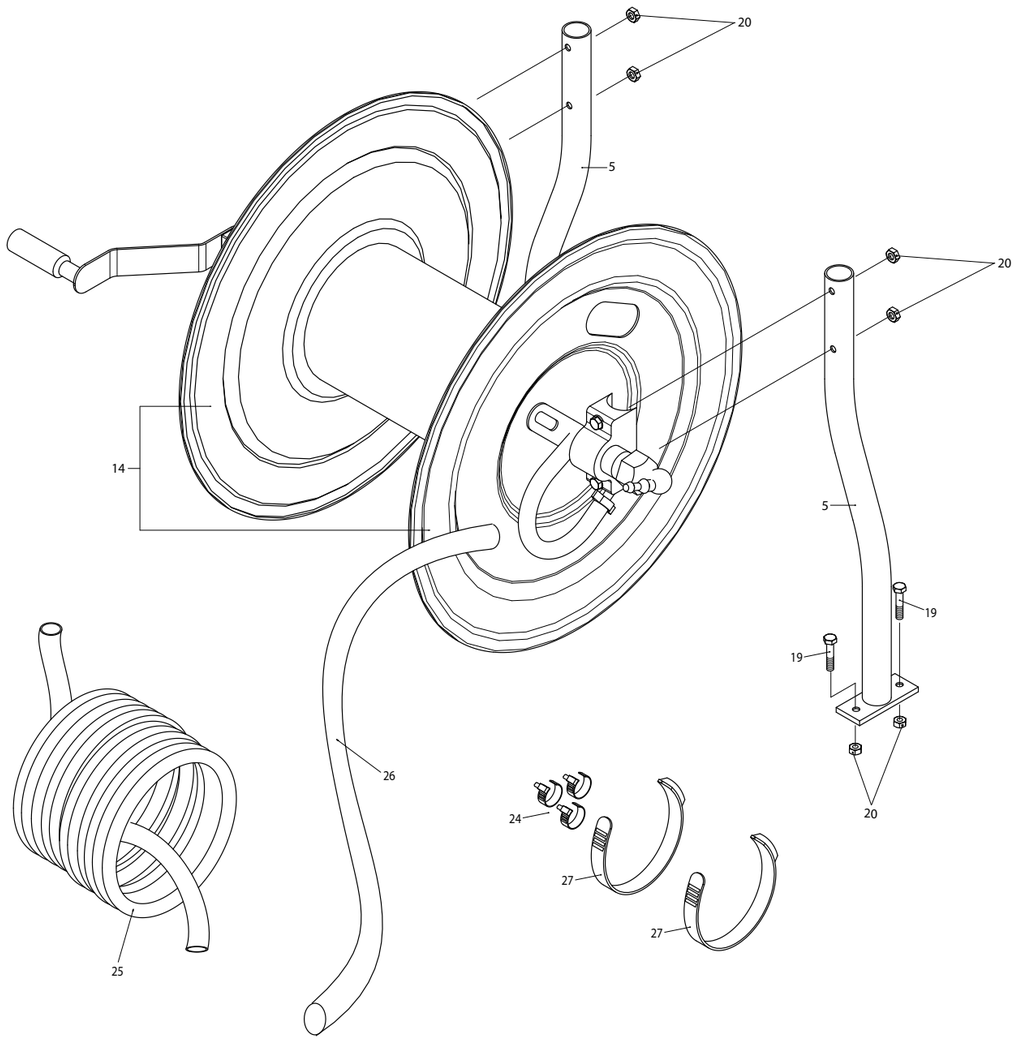

ANNOVI REVERBERI S.p.A.
Via Martin Luther King,3 - 41122 Modena (Italy)
Tel. (+39) 059.414.411 - Telefax (+39) 059.253.505
E - Mail Italia: agricoltura.it@annovireverberi.it
E - Mail export: agriculture.export@annovireverberi.it

ANNOVI REVERBERI®
The Power of Experience

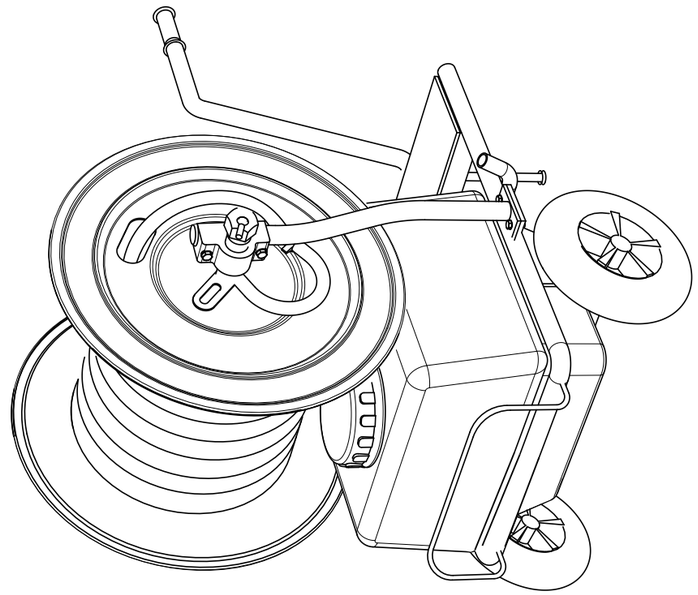

cod. 92888-HN

Pos	Cod.	Descrizione		Description	Q.ty	Note
5	801692	Staffa		Bracket	2	
14	802300	Avvolgitubo		Hose reel	1	
19	180432	Vite	TE M8x20	Screw	4	
20	380240	Dado	M8	Nut	4	
24	800910	Fascetta		Clamp	4	
25	651200	Tubo	50 mt.	Pipe	1	
26	651190	Tubo	Ø 8 - 1,4 m	Pipe	1	
27	621800	Fascetta		Clamp	2	

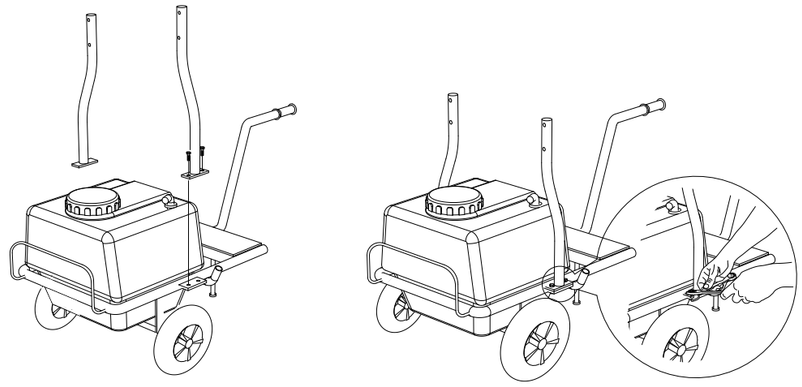

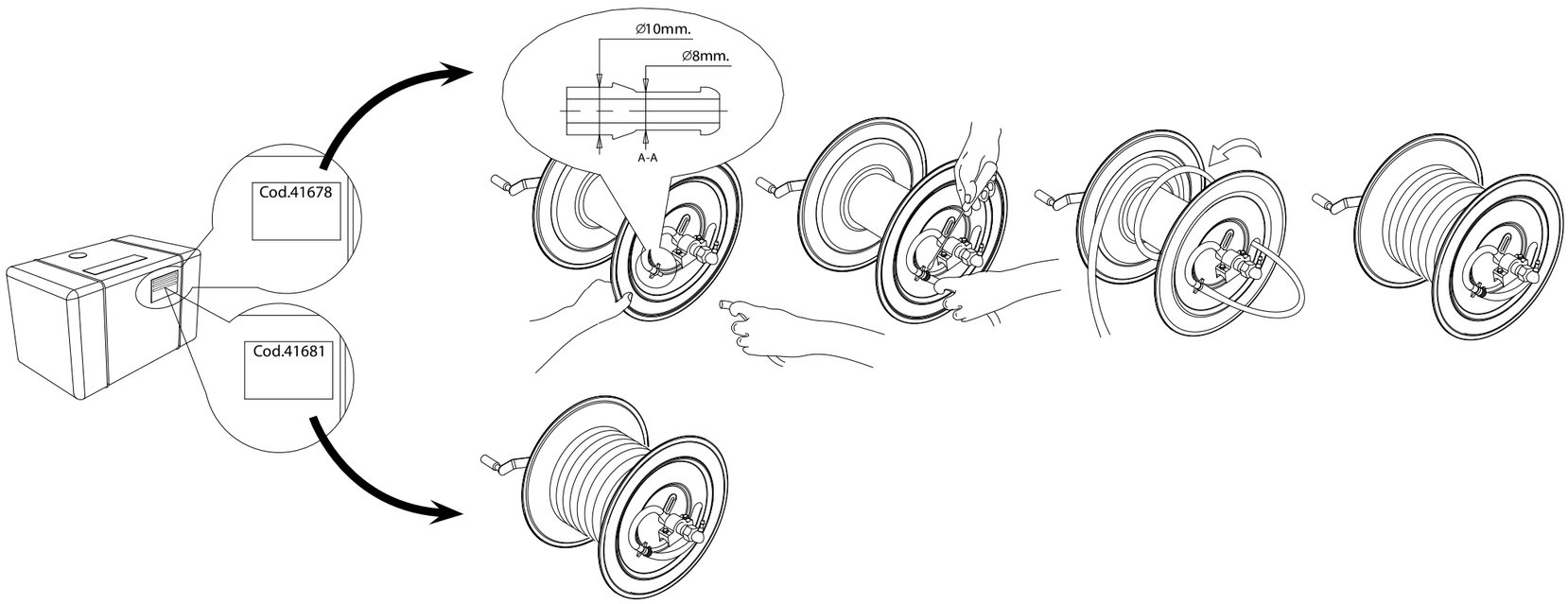
Ø10mm.
Ø8mm.
A-A
Cod.41678
Cod.41681

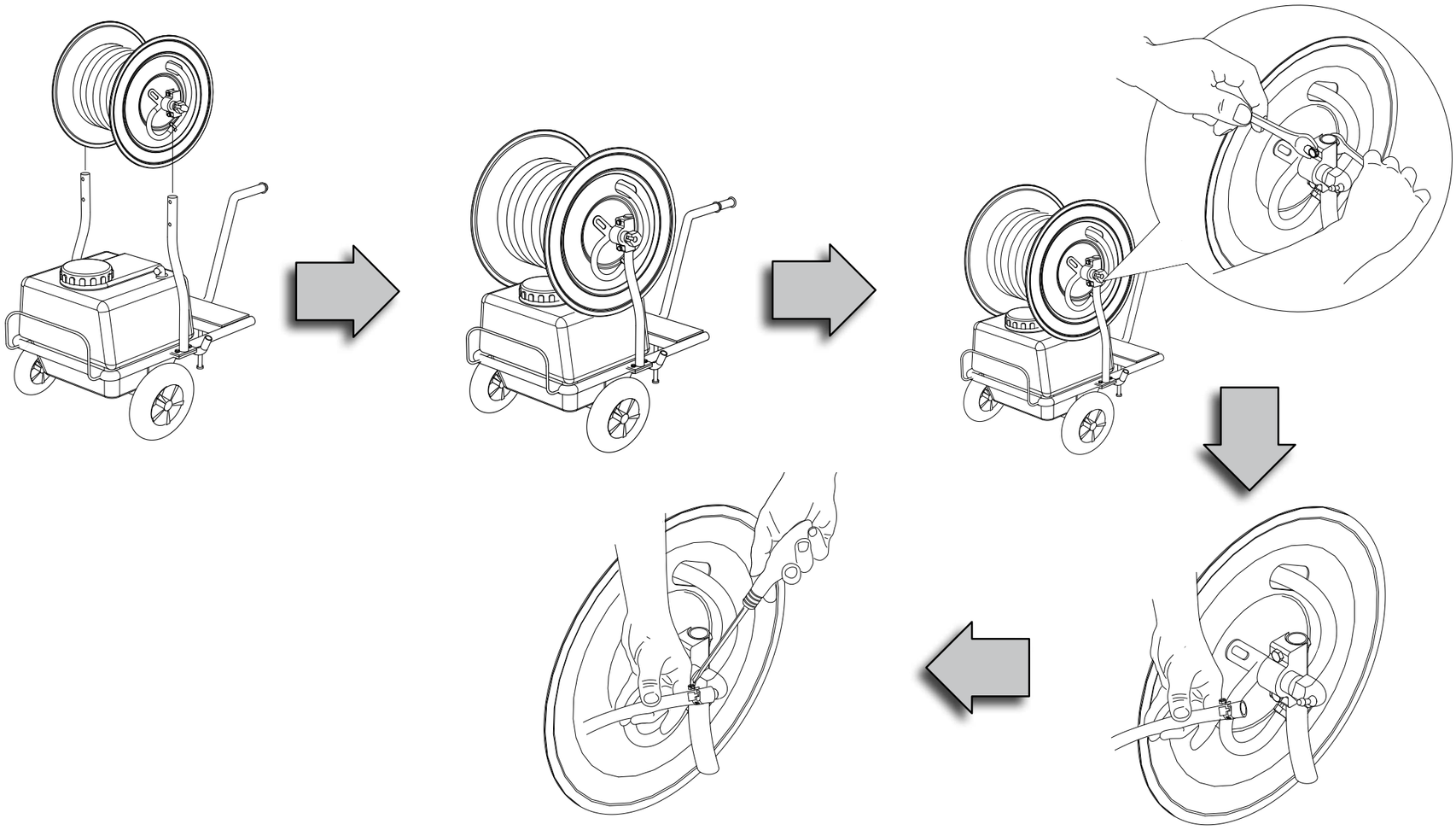

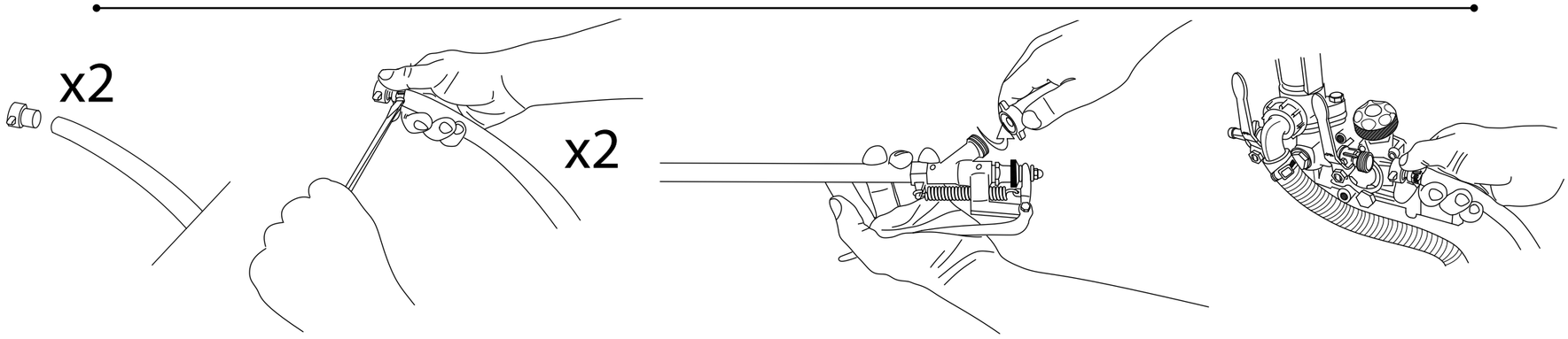
x2
x2