Model 797

Version:

Serial number:

Code: **22321**

23/04/2013

400 V - 50 Hz - 3 ~

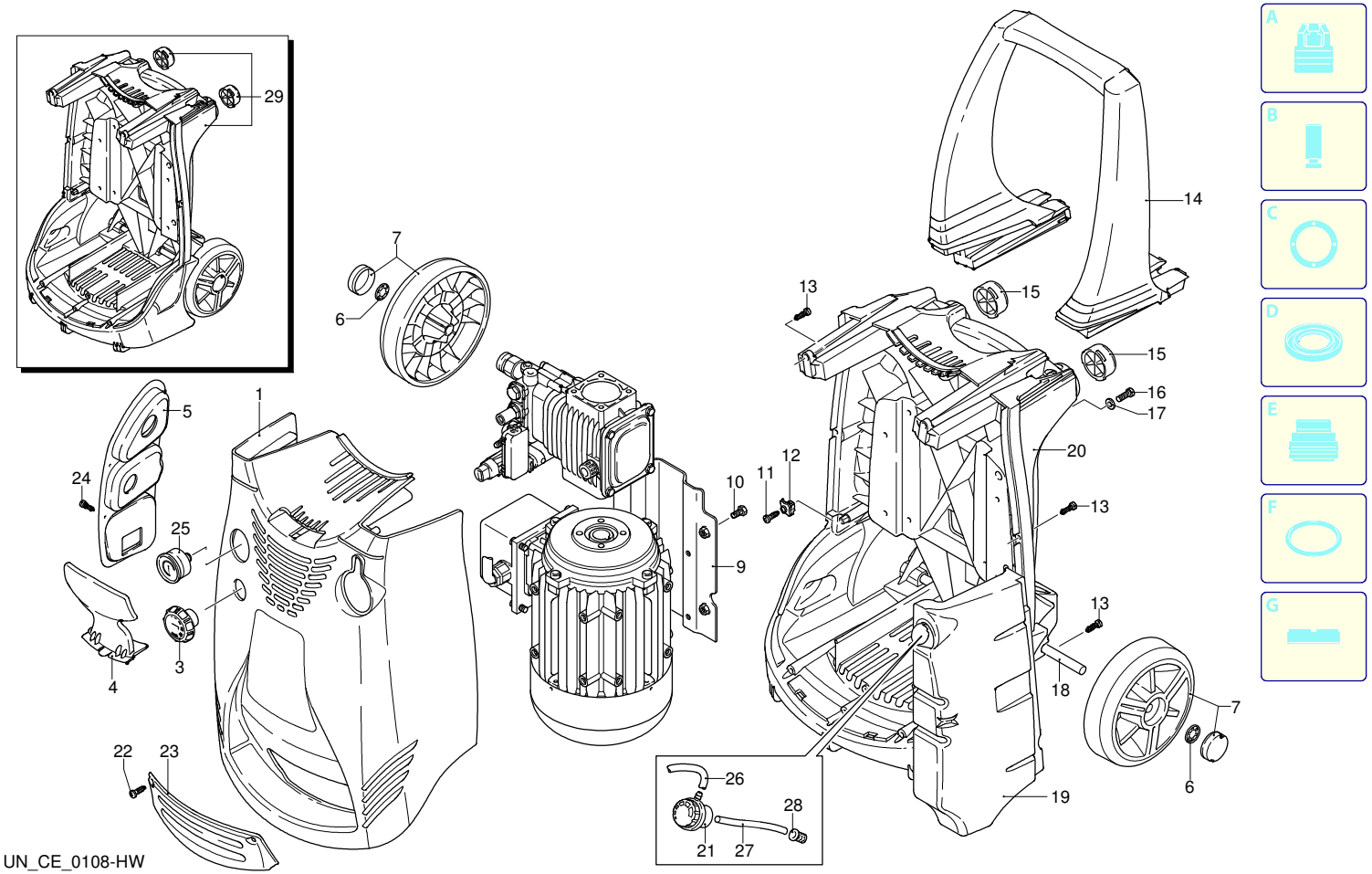

Validity	Pos.	Code	Description	Q
	1	2500370	Blue casing	1
	3	2500310	Knob	1
	4	2500050	Hook	1
	5	2500380	Casing insert	1
	6	1680880	Washer	2
	7	2500320	Wheel	2
	9	2500410	Plate	1
	10	850370	Screw	4
	11	2100300	Screw	1
	12	2600100	Cable gland	1
	13	2100300	Screw	7
	14	2500020	Handle	1
	15	2500130	Rubber foot	2
	16	880280	Screw	4
	17	2180300	Washer	4
	18	2500120	Axle	1
	19	2500110	Tank	1
	20	2500010	Base	1
	21	42113	Plug assembly	1
	22	1261560	Screw	2
	23	2500440	Guard	1
	24	2000110	Screw	4
	25	3232	Pressure gauge	1
	26	2500330	Detergent hose	1
	27	2500330	Detergent hose	1
	28	2000230	Filter	1
	29	2509000	Base assembly	1

Model 797

Version:

Serial number:

Code: **22321**

23/04/2013

400 V - 50 Hz - 3 ~

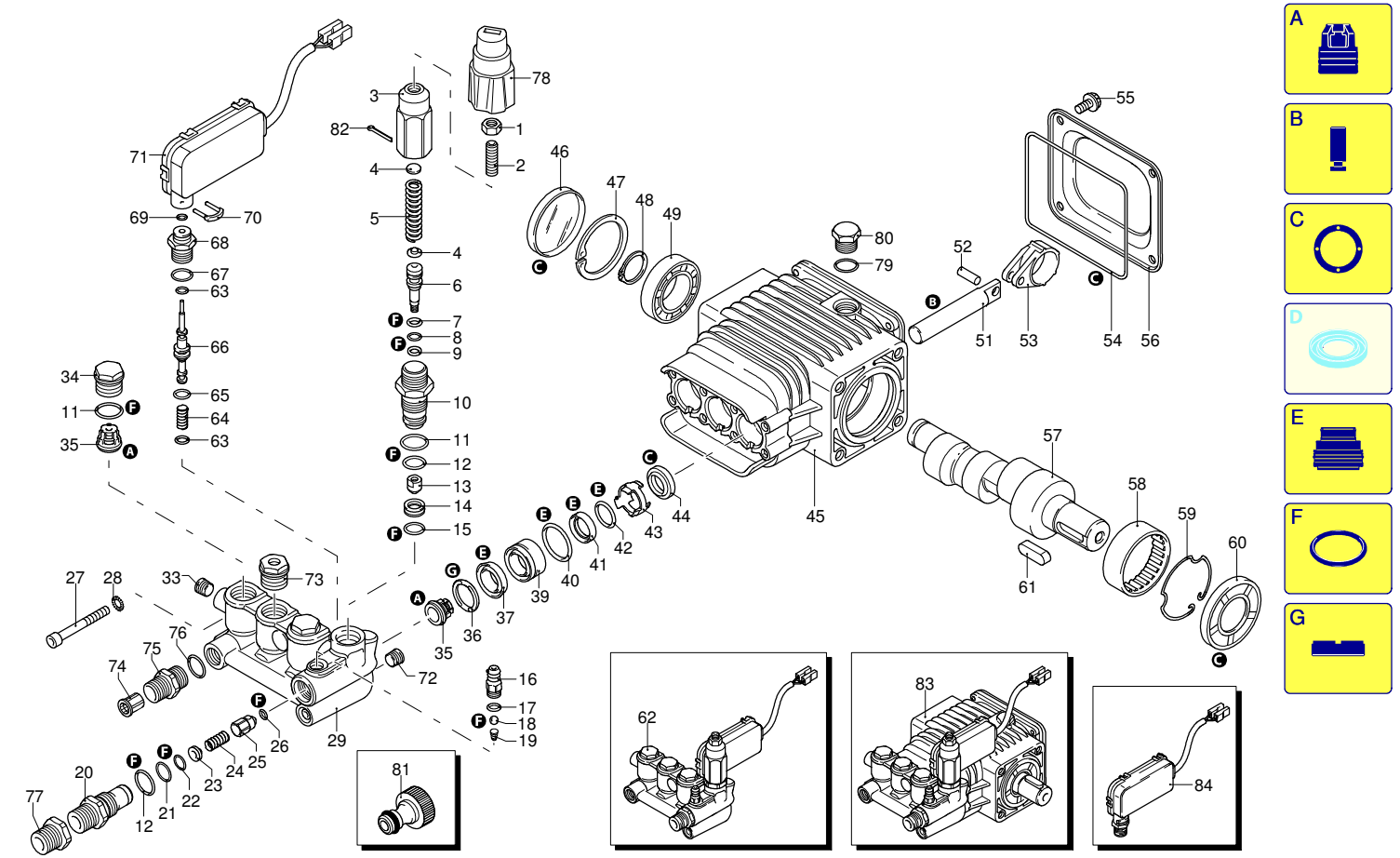

Validity	Pos.	Code	Description	Q
	1	1980300	Nut	1
	2	1980470	Screw	1
	3	2760700	Insert	1
	4	1980220	Wobble plate	2
	5	2760410	Spring	1
	6	2760400	Piston	1
	7	2260100	O-ring	1
	8	660190	O-ring	1
	9	2760210	Ring	1
	10	2760570	Guide	1
	11	1200690	O-ring	4
	12	394280	O-ring	2
	13	2260070	Shutter	1
	14	2760090	Seat	1
	15	770140	O-ring	1
	16	1982520	Hose tail	1
	17	480480	O-ring	1
	18	1250280	Ball	1
	19	1560520	Spring	1
	20	2760230	Injector	1
	21	2760270	O-ring	1
	22	1470210	O-ring	1
	23	2760120	Insert	1
	24	2760200	Spring	1
	25	2760130	Shutter	1
	26	1460430	O-ring	1
	27	801080	Screw	8
	28	1381550	Washer	8
	29	2760500	Head	1
	33	2760260	Plug	2
	34	2760180	Plug	3
	35	2769050	Complete valve	6
	36	1780140	Ring	3
	37	1260220	Water seal	3
	39	1320351	Piston guide	3
	40	1260420	O-ring	3
	41	1260450	Water seal	3
	42	480440	O-ring	3
	43	2760600	Spacer	3
	44	2460170	Oil seal	3
	45	2760460	Pump body	1
	46	1266740	Oil seal	1
	47	1260790	Ring	1
	48	1780550	Ring	1
	49	1780490	Bearing	1
	51	2760450	Piston	3
	52	1780050	Pin	3
	53	1780040	Connecting-rod	3
	54	2760280	O-ring	1
	55	802190	Screw	4
	56	2760110	Cover	1
	57	2760540	Shaft	1
	58	1321190	Bearing	1
	59	1321080	Ring	1
	60	1260750	Ring	1
	61	650250	Key	1
	62	2769208	Head assembly	1
	63	1080190	O-ring	4
	64	1981320	Spring	1
	65	660190	O-ring	1
	66	1540881	Piston	1
	67	880840	O-ring	1

Model 797

Version:

Serial number:

Code: **22321**

23/04/2013

400 V - 50 Hz - 3 ~

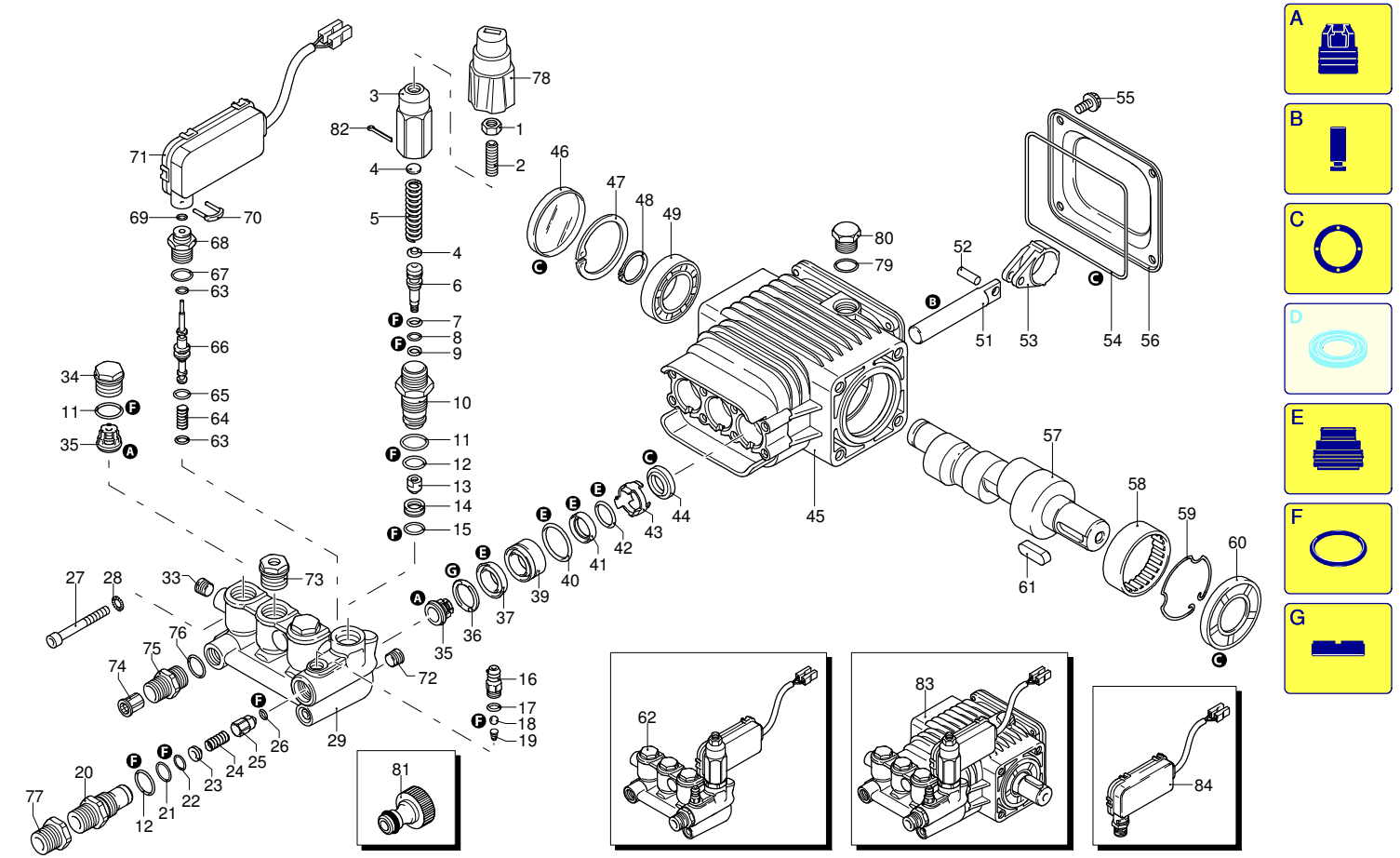

Validity	Pos.	Code	Description	Q
	68	1540870	Plug	1
	69	1260820	O-ring	1
	70	2022201	Fork	1
	71	2029758	TSS box assembly	1
	72	1981190	Screw	1
	73	2760560	Plug	3
	74	1340260	Filter	1
	75	2500490	Fitting	1
	76	480440	O-ring	1
	77	1122260	Fitting	1
	78	2500210	Knob	1
	79	740290	O-ring	1
	80	1980740	Plug	1
	81	40393	Fitting	1
	82	2500550	Split pin	1
	83	22226	Pump assembly	1
	84	42458	TSS kit	1
	A	2186	Valve kit	1
	B	42154	Piston kit	1
	C	42194	Oil seal kit	1
	E	42155	Water seal kit	1
	F	2190	Gasket kit	1
	G	2745	Support ring kit	1

Model 797

Version:

Serial number:

Code: **22321**

23/04/2013

400 V - 50 Hz - 3 ~

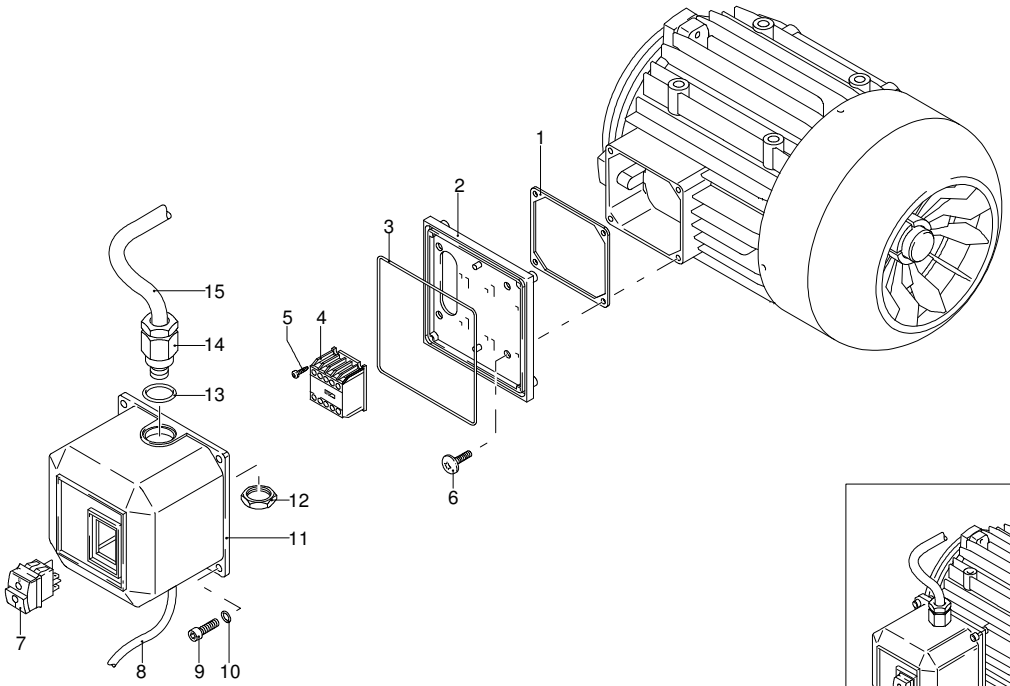

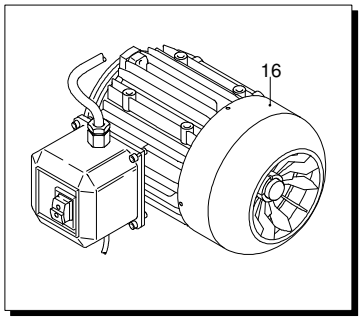

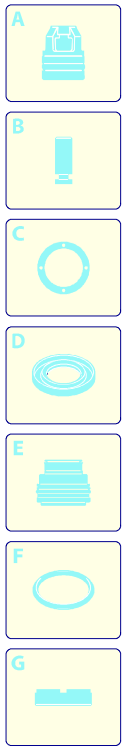

Validity	Pos.	Code	Description	Q
	1	50068	Gasket	1
	2	1700080	Plate	1
	3	1940410	O-ring	1
	4	1700740	Mini-contactor	1
	5	1261570	Screw	4
	6	1460460	Screw	4
	7	2320280	Switch	1
	8	2180650	Cable	1
	9	1261560	Screw	4
	10	1080190	O-ring	4
	11	1700930	Cover	1
	12	1700590	Nut	1
	13	880270	O-ring	1
	14	1382380	Cable gland	1
	15	1700640	Cable	1
	16	44079	Motor	1

UN_CE_0182-BX

Model 797

Version:

Serial number:

Code: **22321**

23/04/2013

400 V - 50 Hz - 3 ~

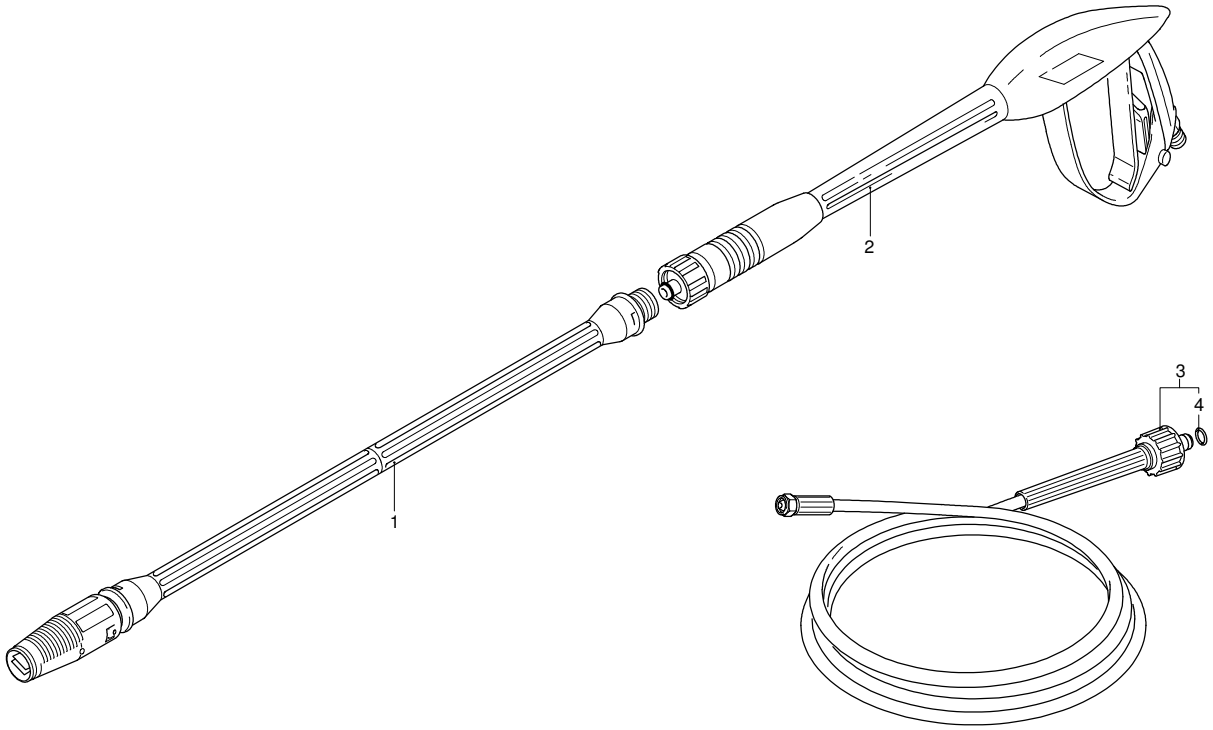

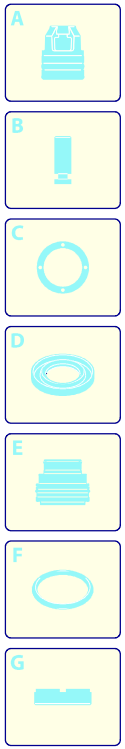

Validity	Pos.	Code	Description	Q
	1	40039	Lance+lance head	1
	2	41046	Gun	1
	3	1271960	High pressure hose	1
	4	2000770	O-ring	1

UN_CE_0515-HW