Model 737

Version:

Serial number:

Code: **12361**

10/07/2015

230 V - 50 Hz | **schuko**

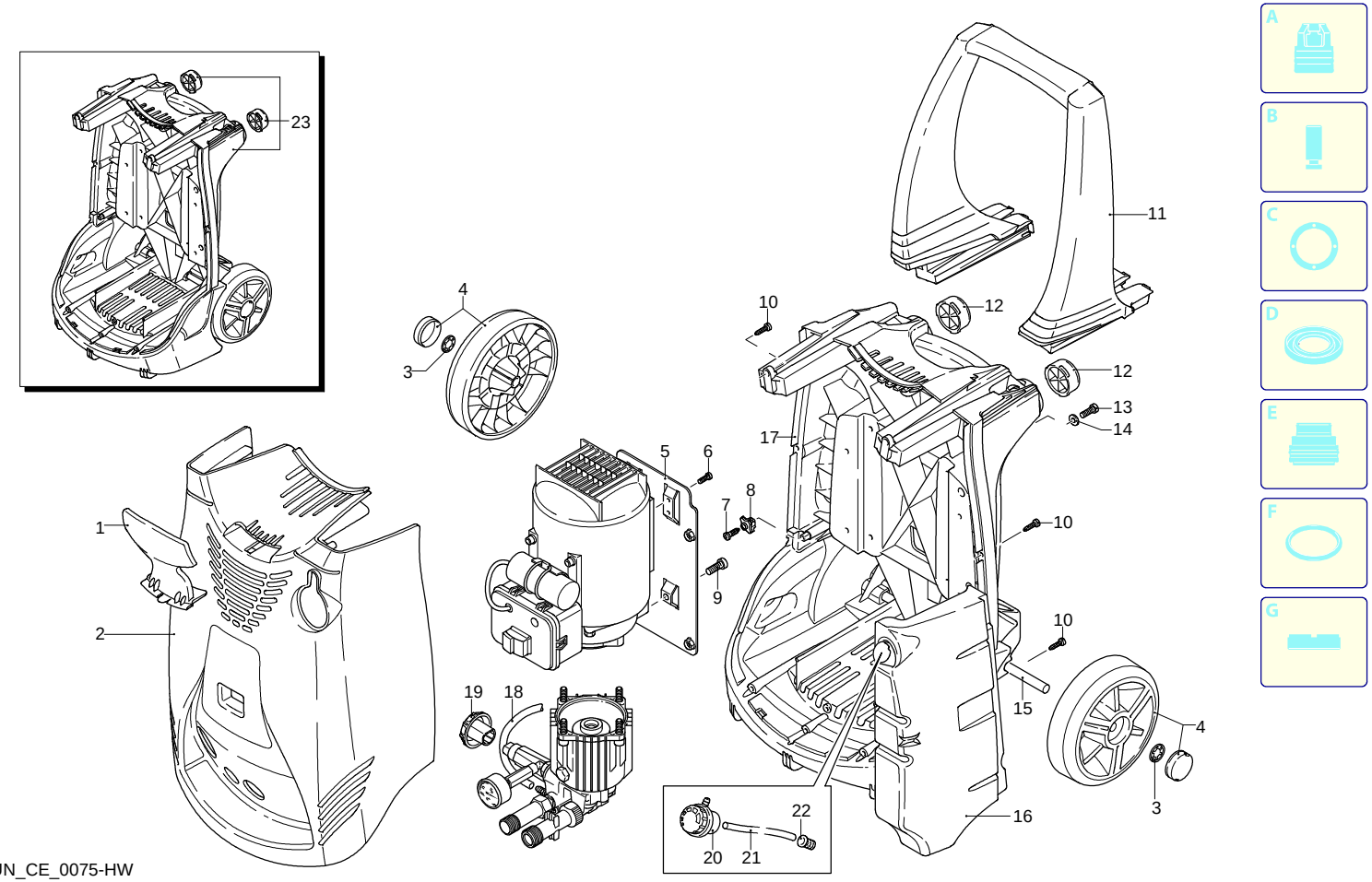

UN_CE_0075-HW

Validity	Pos.	Code	Description	Q
	1	2500050	Hook	1
	2	2500035	Blue casing	1
	3	1680880	Washer	2
	4	2500320	Wheel	2
	5	2500090	Plate	1
	6	2320190	Screw	2
	7	2100300	Screw	1
	8	2600100	Cable gland	1
	9	850370	Screw	2
	10	2100300	Screw	7
	11	2500020	Handle	1
	12	2500130	Rubber foot	2
	13	880280	Screw	4
	14	2180300	Washer	4
	15	2500120	Axle	1
	16	2500110	Tank	1
	17	2500010	Base	1
	18	1270960	Detergent hose	1
	19	2500310	Knob	1
	20	42113	Plug assembly	1
	21	2500330	Detergent hose	1
	22	2000230	Filter	1
	23	2509000	Base assembly	1

Model 737

Version:

Serial number:

Code: **12361**

10/07/2015

230 V - 50 Hz | **schuko**

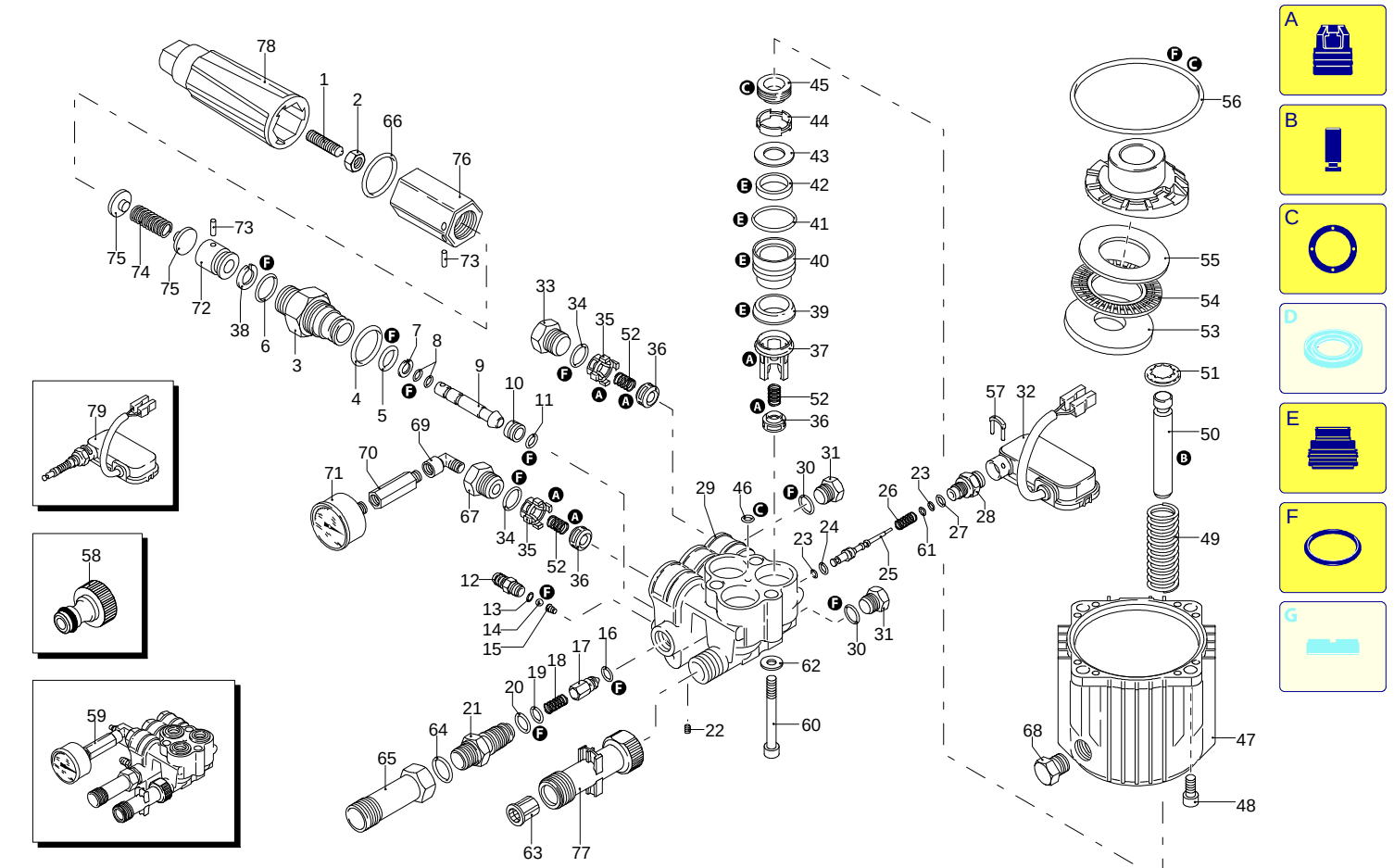

UN_CE_0076-AW

Validity	Pos.	Code	Description	Q
	1	1980470	Screw	1
	2	1980300	Nut	1
	3	1980210	Piston guide	1
	4	740290	O-ring	1
	5	800560	O-ring	1
	6	1080250	O-ring	1
	7	1271170	Ring	1
	8	1080190	O-ring	2
	9	1271160	Piston	1
	10	1980200	Seat	1
	11	1470210	O-ring	1
	12	1982520	Hose tail	1
	13	480480	O-ring	1
	14	1250280	Ball	1
	15	1560520	Spring	1
	16	1460430	O-ring	1
	17	1540170	Shutter	1
	18	1080091	Spring	1
	19	394280	O-ring	1
	20	1200690	O-ring	1
	21	1271701	Injector	1
	22	1981190	Screw	1
	23	1080190	O-ring	2
	24	660190	O-ring	1
	25	1982990	Piston	1
	26	1981320	Spring	1
	27	880840	O-ring	1
	28	1983360	Fitting	1
	29	1982170	Head	1
	30	820510	O-ring	2
	31	880581	Plug	2
	32	2029752	TSS box assembly	1
	33	1260162	Plug	2
	34	960160	O-ring	3
	35	1981460	Bushing	3
	36	880240	Valve	6
	37	1981450	Bushing	3
	38	1080401	Ring	1
	39	2460180	O-ring	3
	40	1981470	Piston guide	3
	41	770130	O-ring	3
	42	1260440	Water seal	3
	43	1980170	Ring	3
	44	1980430	Spacer	3
	45	1260460	Oil seal	3
	46	770090	O-ring	1
	47	1980460	Pump body	1
	48	180030	Screw	4
	49	1981140	Spring	3
	50	1981440	Piston	3
	51	1980150	Ring	3
	52	1322230	Spring	6
	53	1980130	Fifth wheel	1
	54	1980250	Fifth wheel	1
	55	1980240	Fifth wheel	1
	56	1980340	O-ring	1
	57	2022201	Fork	1
	58	1461470	Fitting	1
	59	1989293	Head assembly	1
	60	1980310	Screw	3
	61	1260820	O-ring	1
	62	650530	Washer	3

Model 737

Version:

Serial number:

Code: **12361**

10/07/2015

230 V - 50 Hz | **schuko**

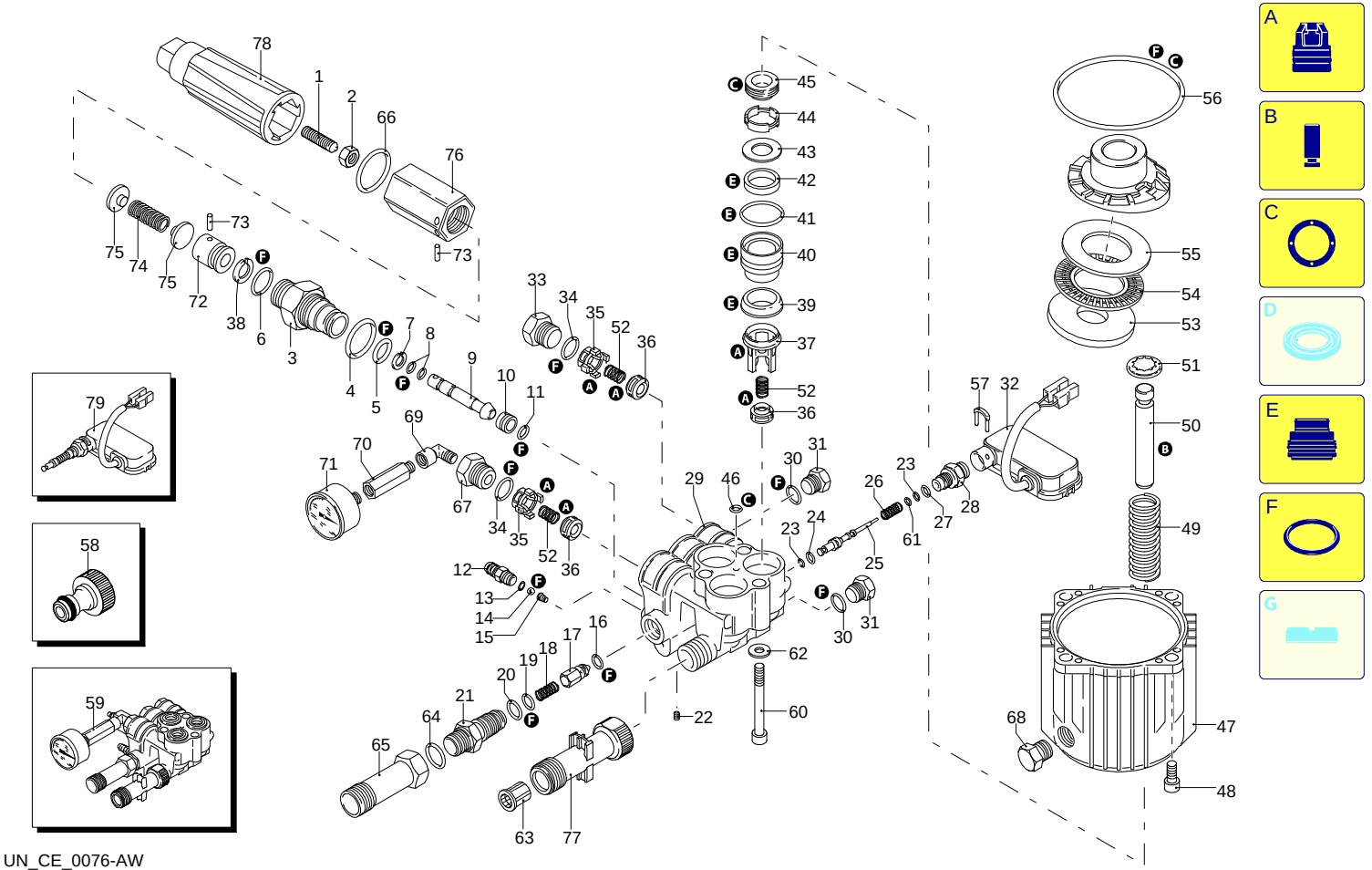

UN_CE_0076-AW

Validity	Pos.	Code	Description	Q
	63	1340260	Filter	1
	64	390180	O-ring	1
	65	2440210	Extension	1
	66	1150640	O-ring	1
	67	2500450	Plug	1
	68	1980290	Level gauge	1
	69	1465850	Fitting	1
	70	2500140	Extension	1
	71	3233	Pressure gauge	1
	72	1080041	Piston	1
	73	1080070	Pin	1
	74	1271070	Spring	1
	75	1980220	Wobble plate	2
	76	1980390	Insert	1
	77	2500270	Extension	1
	78	2500080	Knob	1
	79	42143	TSS kit	1
	A	2581	Valve kit	1
	B	2593	Piston kit	1
	C	2511	Oil seal kit	1
	E	2582	Water seal kit	1
	F	2799	Gasket kit	1

Model 737

Version:

Serial number:

Code: **12361**

10/07/2015

230 V - 50 Hz | **schuko**

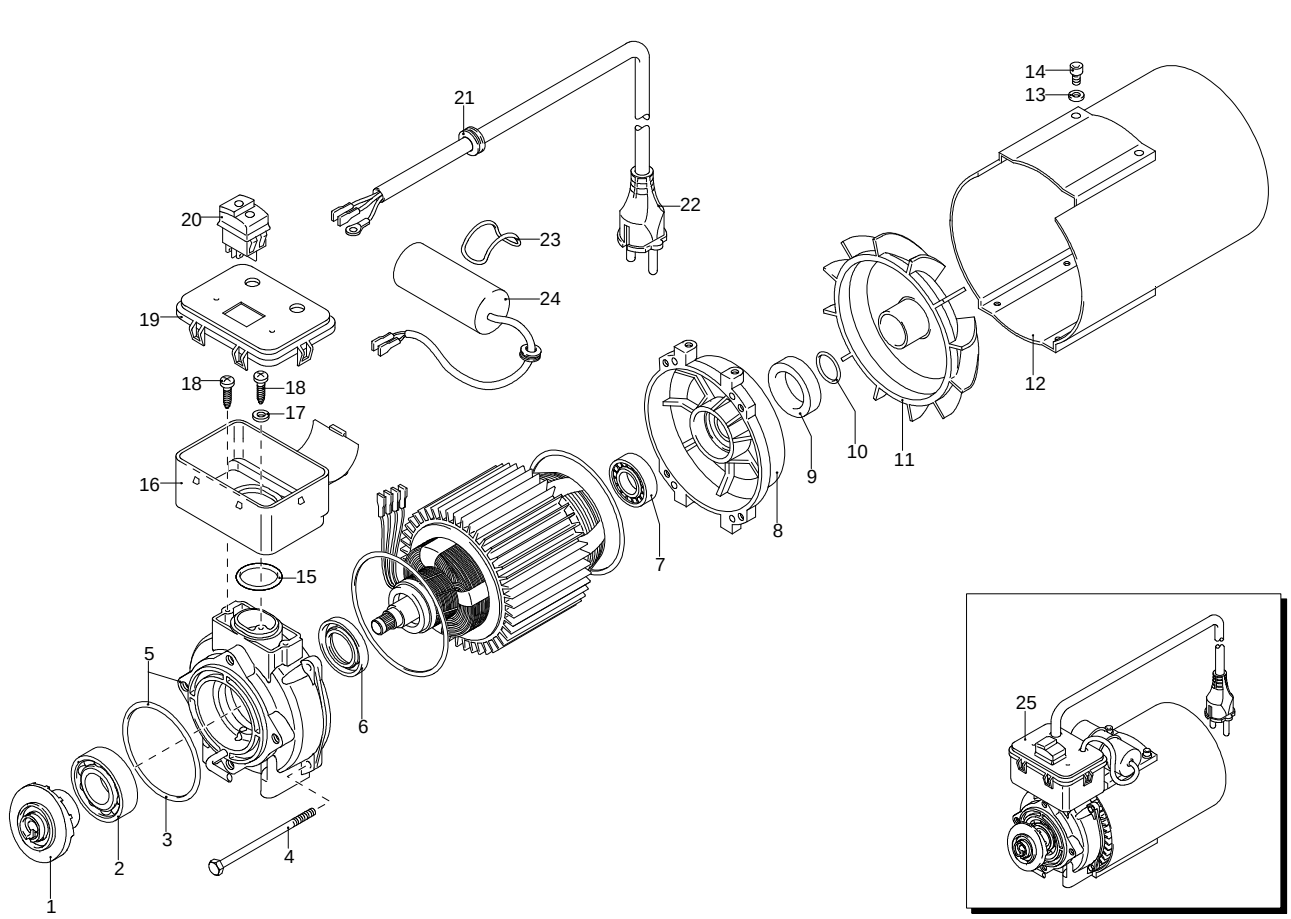

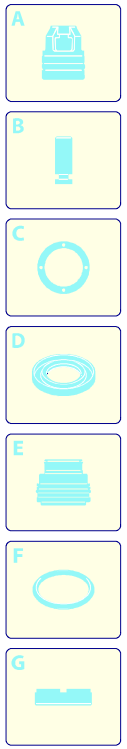

UN_CE_0077-BX

Validity	Pos.	Code	Description	Q
	1	1983110	Wobble plate	1
	2	1981210	Bearing	1
	3	1980340	O-ring	1
	4	2320090	Screw	4
	5	1982040	Flange	1
	6	1260750	Ring	1
	7	1460590	Bearing	1
	8	1460040	Shield	1
	9	1461200	Oil seal	1
	10	394280	O-ring	1
	11	1460370	Fan	1
	12	1460340	Conveyor	1
	13	1680960	Washer	2
	14	1460460	Screw	2
	15	660170	O-ring	1
	16	2320131	Box	1
	17	1262400	Washer	1
	18	2020570	Screw	3
	19	2320270	Cover	1
	20	2320280	Switch	1
	21	2021480	Gland	1
	22	1760450	Cable	1
	23	2100840	O-ring	1
	24	1982590	Capacitor	1
	25	4601	Motor	1

Model 737

Version:

Serial number:

Code: **12361**

10/07/2015

230 V - 50 Hz | **schuko**

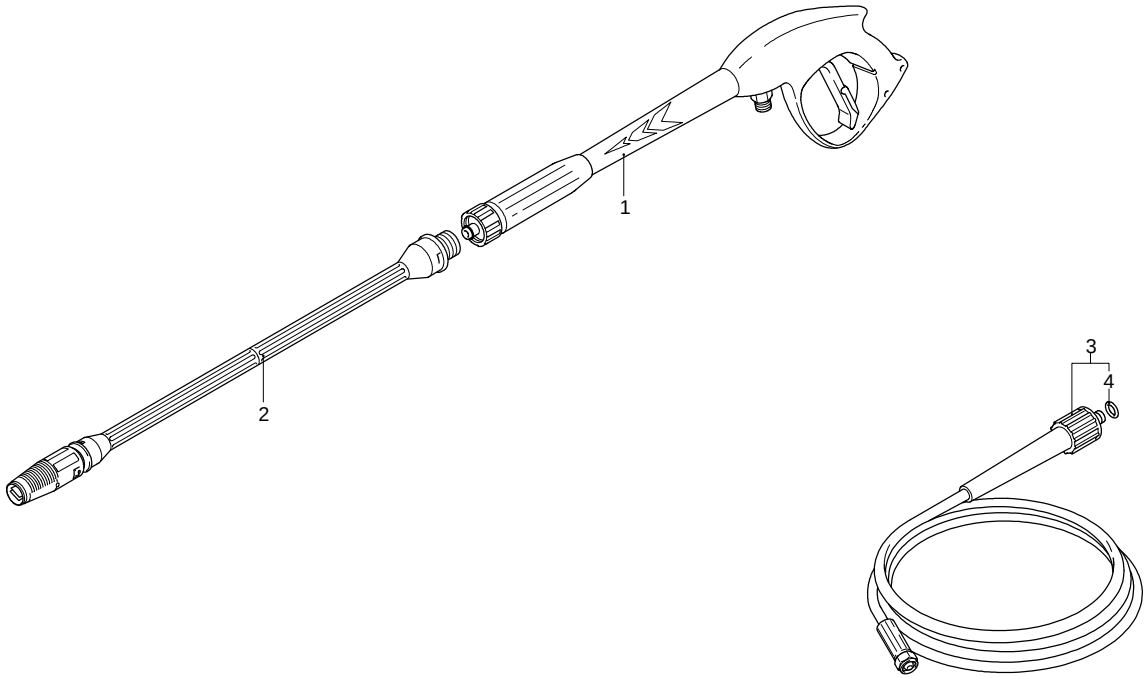

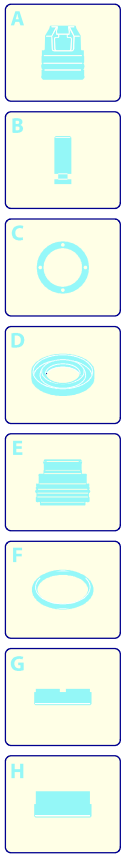

Validity	Pos.	Code	Description	Q
	1	40925	Gun	1
	2	40206	Lance+lance head	1
	3	3780441	High pressure hose	1
	4	2000770	O-ring	1

UN_CE_0061-CR