Model 6950

Version:

Serial number:

Code: **24103**

26/04/2018

400 V - 50 Hz - 3 ~

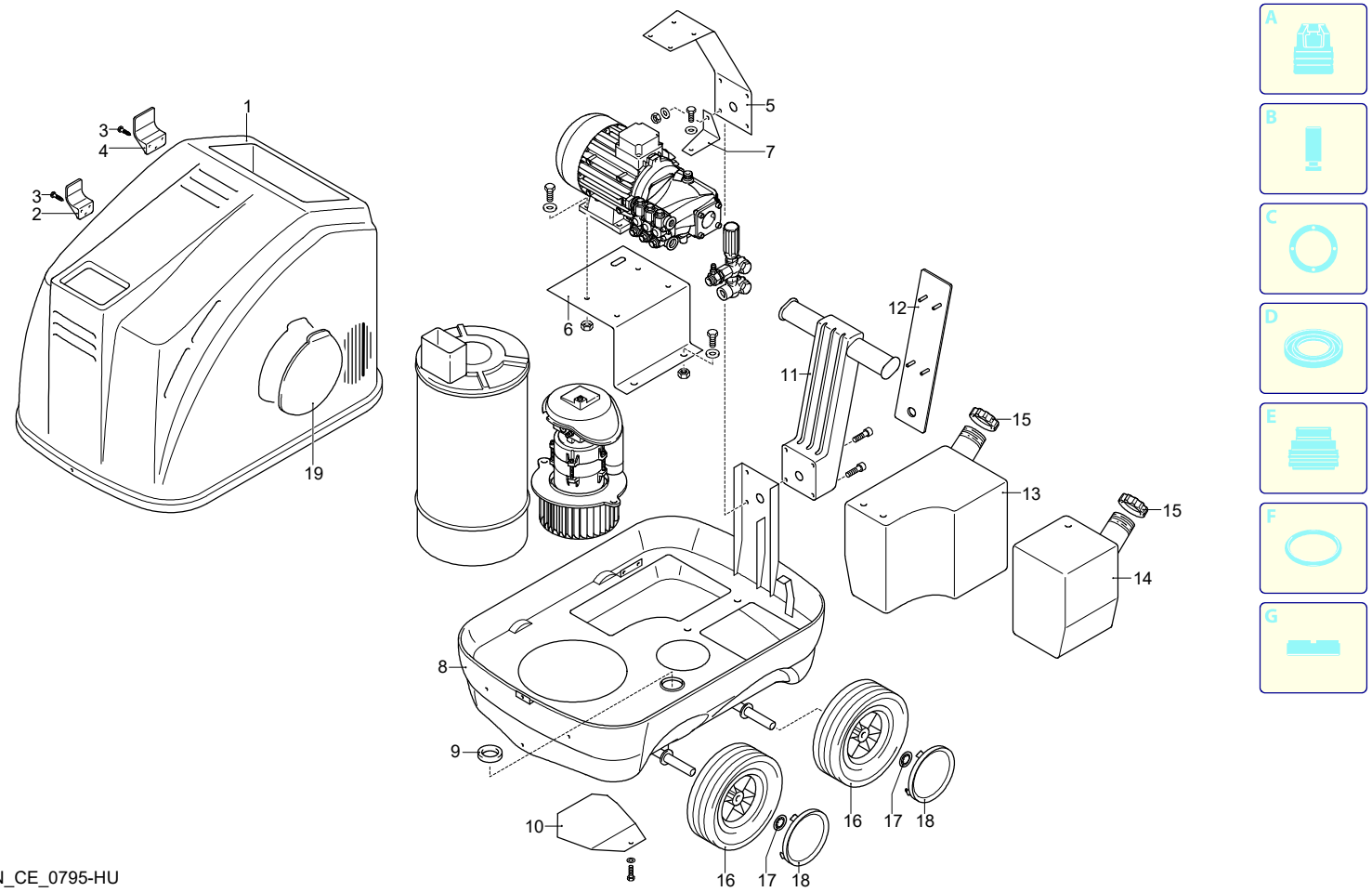

Validity	Pos.	Code	Description	Q
	1	3164170	Blue casing	1
	2	3160100	Accessories carrier	1
	3	2100300	Screw	6
	4	3160110	Accessories carrier	1
	5	3164180	Support	1
	6	3164190	Support	1
	7	3164200	Support	1
	8	3164210	Frame	1
	9	3161070	Gland	1
	10	3161900	Plate	1
	11	3163140	Handle	1
	12	3163150	Cover	1
	13	3164220	Tank	1
	14	3164230	Tank	1
	15	3161920	Plug	2
	16	3164380	Wheel	4
	17	3162010	Ring	4
	18	3161940	Guard	4
	19	3160130	Door	1

UN_CE_0795-HU

Model 6950

Version:

Serial number:

Code: **24103**

26/04/2018

400 V - 50 Hz - 3 ~

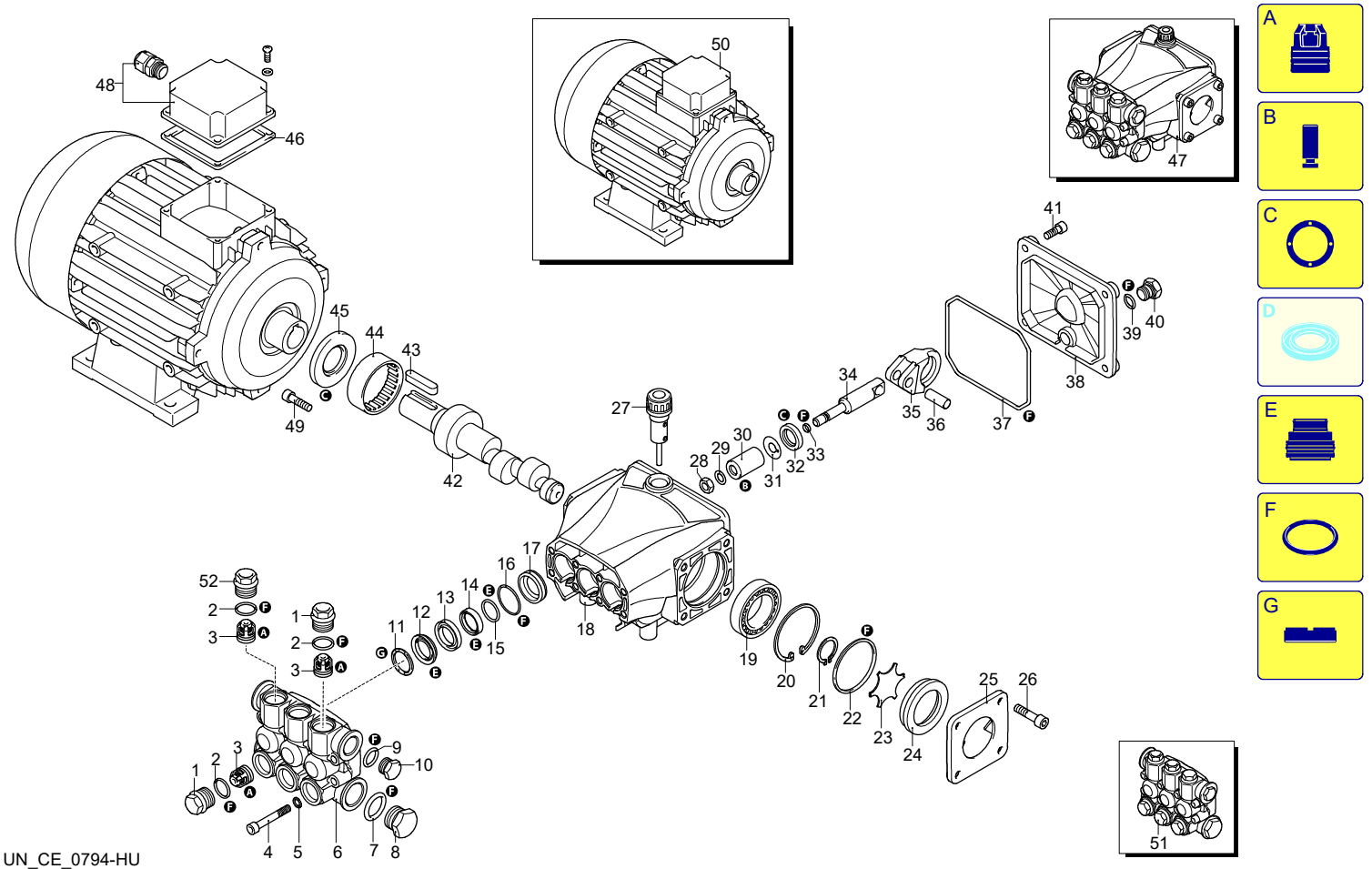

UN_CE_0794-HU

Validity	Pos.	Code	Description	Q
	1	3200110	Plug	4
	2	1200690	O-ring	6
	3	2769050	Complete valve	6
	4	800410	Screw	8
	5	1381550	Washer	8
	6	3200020	Head	1
	7	180101	O-ring	1
	8	820361	Plug	1
	9	740290	O-ring	1
	10	1980740	Plug	1
	11	1780140	Ring	3
	12	1780720	Water seal	3
	13	3200130	Piston guide	3
	14	3200142	Gasket	3
	15	3200260	Ring	3
	16	770590	O-ring	3
	17	3200120	Piston guide	3
	18	3200010	Pump body	1
	19	1780490	Bearing	1
	20	1260790	Ring	1
	21	1780550	Ring	1
	22	395081	O-ring	1
	23	3200090	Plate	1
	24	3200080	Level gauge	1
	25	3200070	Support	1
	26	1200430	Screw	4
	27	880130	Plug	1
	28	1260110	Nut	3
	29	1260100	Washer	3
	30	1260210	Piston	3
	31	1260091	Plate	3
	32	1260460	Oil seal	3
	33	480480	O-ring	3
	34	3200060	Piston	3
	35	3200040	Connecting-rod	3
	36	1780050	Pin	3
	37	2760280	O-ring	1
	38	3200030	Cover	1
	39	820510	O-ring	1
	40	880581	Plug	1
	41	3200220	Screw	4
	42	3200050	Shaft	1
	43	3200230	Key	1
	44	1321190	Bearing	1
	45	1260750	Ring	1
	46	50068	Gasket	1
	47	23302	Pump assembly	1
	48	50069	Box	1
	49	1200430	Screw	4
	50	44273	Motor	1
	51	3209200	Head assembly	1
	52	3200430	Plug	2
	A	2186	Valve kit	1
	B	42467	Piston kit	1
	C	42468	Oil seal kit	1
	E	42469	Water seal kit	1
	F	42470	Gasket kit	1
	G	2745	Support ring kit	1

Model 6950

Version:

Serial number:

Code: **24103**

26/04/2018

400 V - 50 Hz - 3 ~

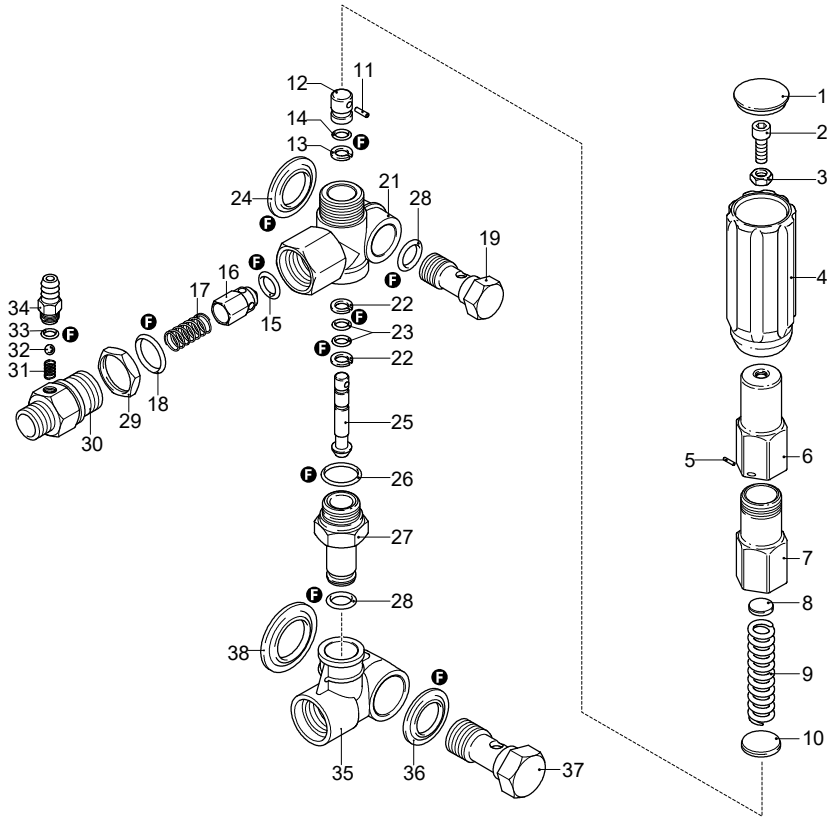

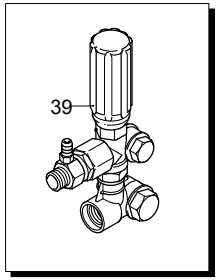

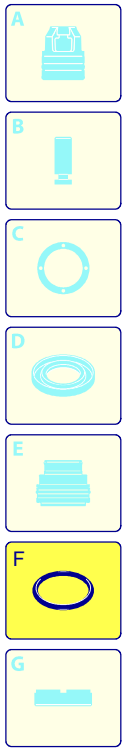

Validity	Pos.	Code	Description	Q
	1	1560580	Plug	1
	2	540290	Screw	1
	3	1660210	Nut	1
	4	1560400	Knob	1
	5	1080070	Pin	1
	6	1560420	Screw	1
	7	1560410	Guide	1
	8	1560440	Wobble plate	1
	9	1560350	Spring	1
	10	1080610	Wobble plate	1
	11	1080660	Pin	1
	12	1080540	Piston	1
	13	391000	O-ring	1
	14	1080640	Ring	1
	15	1560150	O-ring	1
	16	1560100	Shutter	1
	17	1560140	Spring	1
	18	180101	O-ring	1
	19	1540272	Screw	1
	21	1560010	Valve body	1
	22	1080550	Ring	2
	23	480480	O-ring	2
	24	1560280	Washer	1
	25	1560320	Piston	1
	26	880270	O-ring	1
	27	1560051	Fitting	1
	28	390080	O-ring	2
	29	1560510	Nut	1
	30	1560530	Fitting	1
	31	1560520	Spring	1
	32	1250280	Ball	1
	33	480480	O-ring	1
	34	1560490	Hose tail	1
	35	1540020	Suction fitting	1
	36	1540120	Washer	1
	37	1540090	Fitting	1
	38	1560290	Washer	1
	39	20082	Complete valve	1
	F	2611	Gasket kit	1

UN_CE_0737-ET

Model 6950

Version:

Serial number:

Code: **24103**

26/04/2018

400 V - 50 Hz - 3 ~

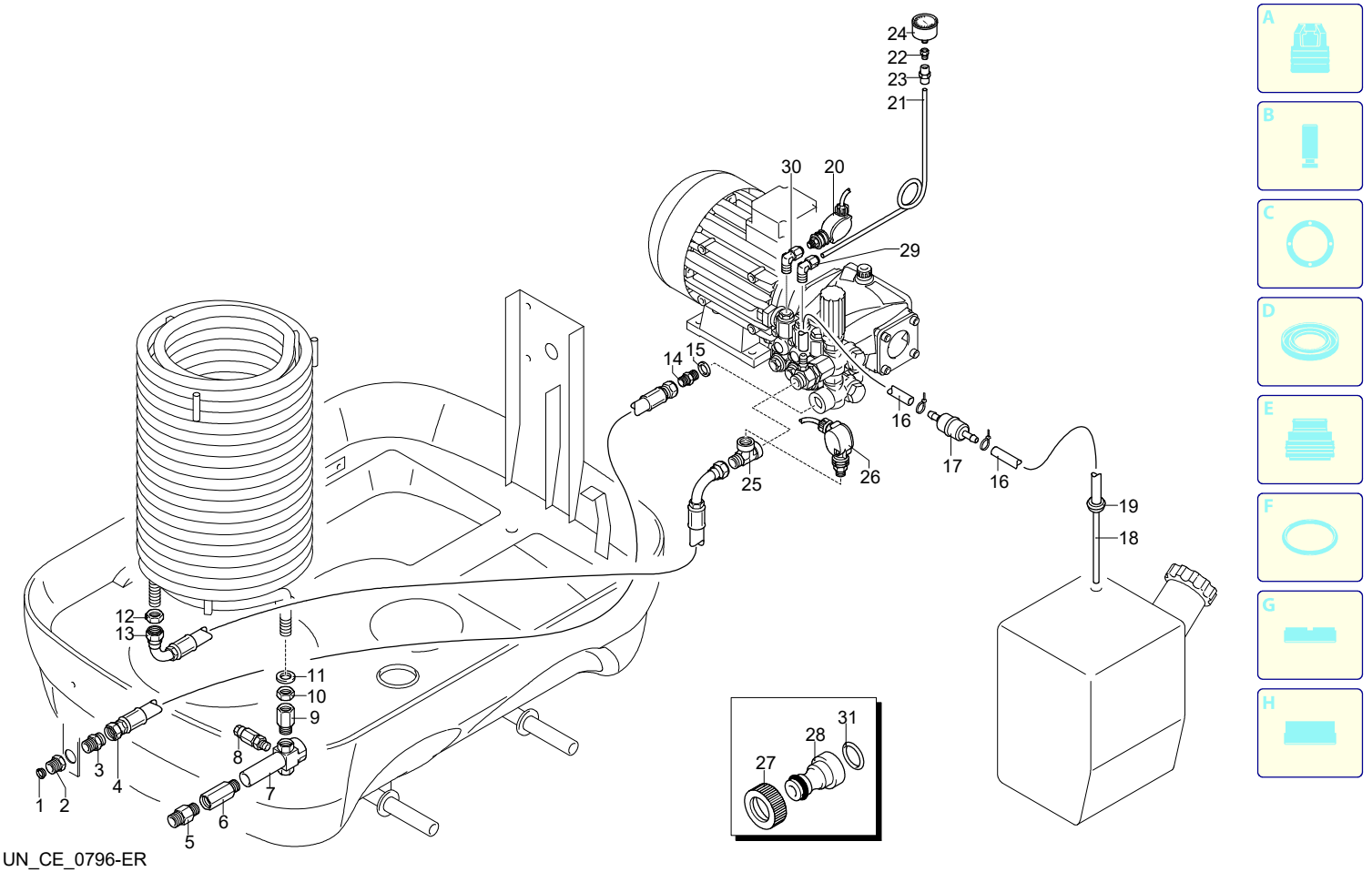

UN_CE_0796-ER

Validity	Pos.	Code	Description	Q
	1	50713	Filter	1
	2	3160480	Fitting	1
	3	3161180	Fitting	1
	4	3161300	Pipe	1
	5	3161150	Fitting	1
	6	3160470	Fitting	1
	7	3161160	Fitting	1
	8	3161400	Safety valve	1
	9	3160430	Fitting	1
	10	3161490	Nut	1
	11	3162040	Washer	1
	12	3161490	Nut	1
	13	3161340	Pipe	1
	14	3160210	Fitting	1
	15	740290	O-ring	1
	16	3161570	Pipe	1
	17	3163560	Filter	1
	18	3163810	Pipe	1
	19	3161050	Gland	1
	20	3164320	Pressure switch	1
	21	3164240	Pipe	1
	22	3161260	Fitting	1
	23	3164070	Fitting	1
	24	3161040	Pressure gauge	1
	25	3164110	Fitting	1
	26	3164310	Pressure switch	1
	27	3161010	Ring nut	1
	28	3161140	Fitting	1
	29	3161110	Fitting	1
	30	3161220	Fitting	1
	31	3162300	Gasket	1

Model 6950

Version:

Serial number:

Code: **24103**

26/04/2018

400 V - 50 Hz - 3 ~

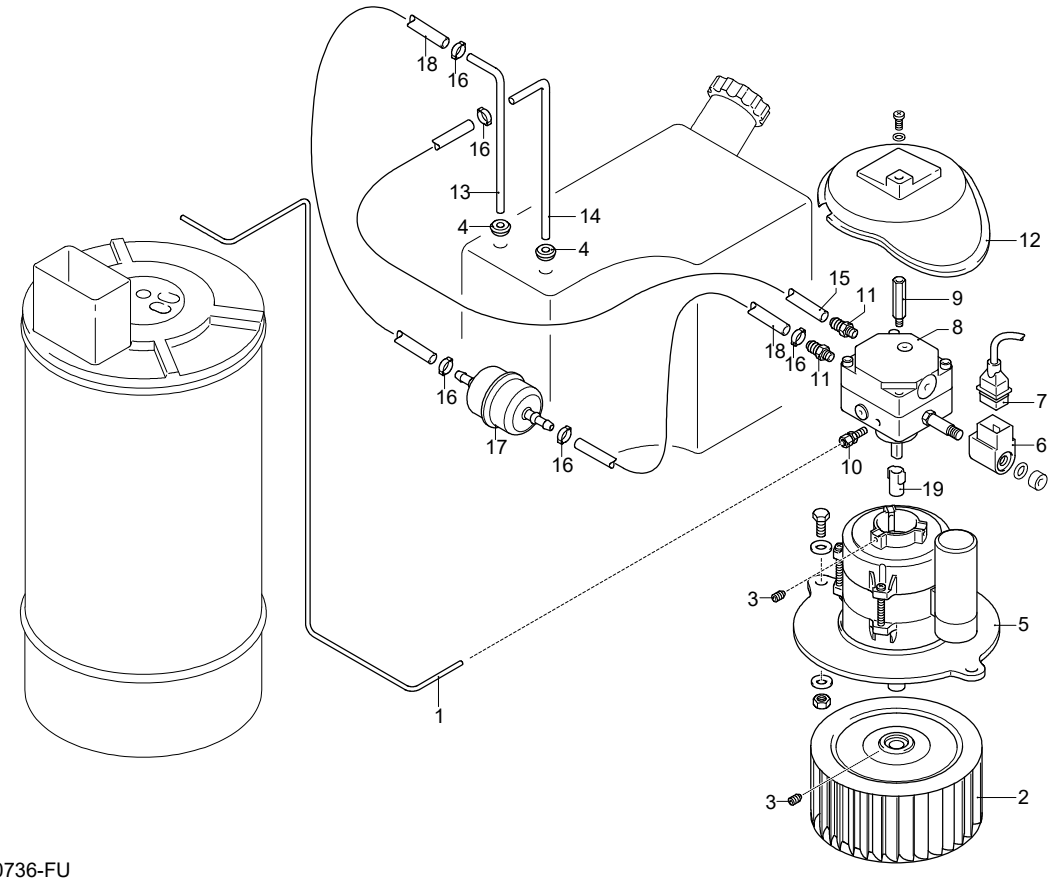

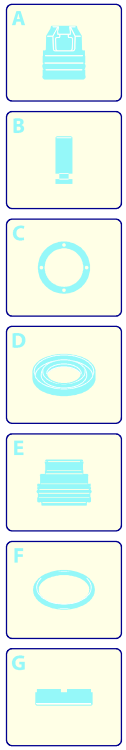

Validity	Pos.	Code	Description	Q
	1	3161650	Pipe	1
	2	3161820	Fan	1
	3	3163540	Screw	1
	4	3161050	Gland	2
	5	3163490	Motor	1
	6	3160320	Solenoid	1
	7	3161440	Cable	1
	8	3160310	Pump	1
	9	3163770	Stud bolt	1
	10	3160330	Fitting	1
	11	3160340	Hose tail	2
	12	3162000	Guard	1
	13	3163780	Pipe	1
	14	3161660	Pipe	1
	15	3161580	Pipe	1
	16	3162060	Clamp	5
	17	3161510	Filter	1
	18	3161600	Pipe	1
	19	3160300	Coupling	1

UN_CE_0736-FU

Model 6950

Version:

Serial number:

Code: **24103**

26/04/2018

400 V - 50 Hz - 3 ~

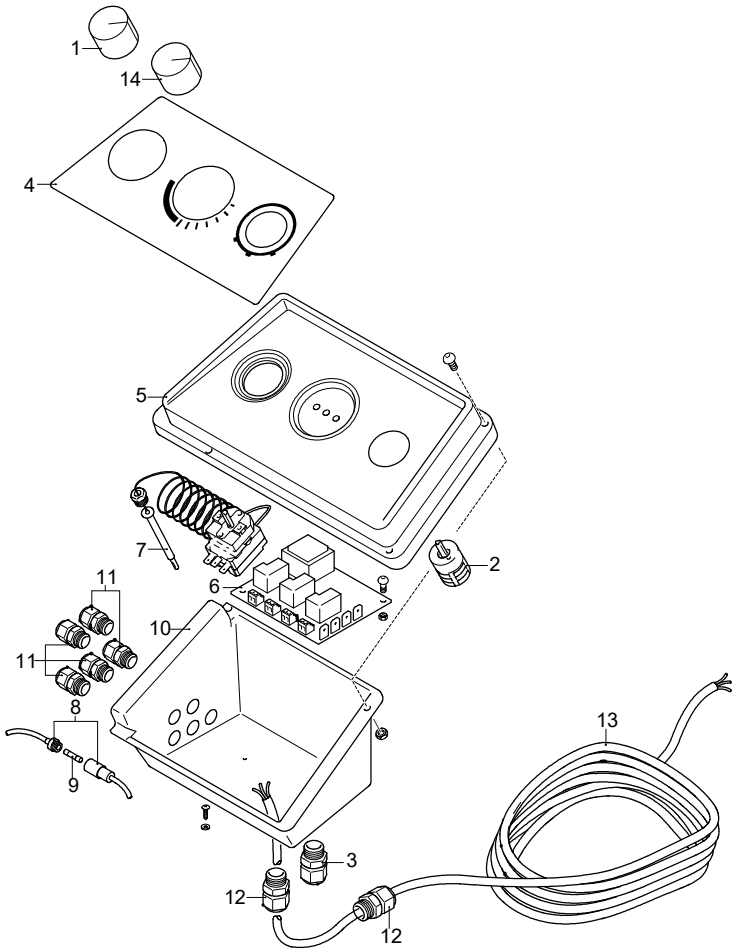

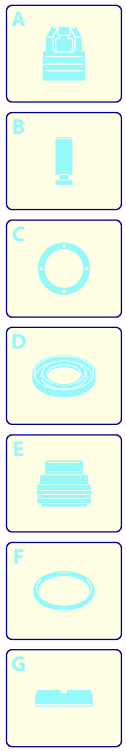

Validity	Pos.	Code	Description	Q
	1	3161980	Knob	1
	2	3160840	Switch	1
	3	3164260	Gland	1
	4	3164270	Plate	1
	5	3164280	Support	1
	6	3160900	Board - ALB 012	1
	7	3161800	Thermostat	1
	8	3163720	Fuse holder	1
	9	3160920	Fuse	1
	10	3164290	Box	1
	11	3160860	Gland	5
	12	3160870	Gland	2
	13	3160810	Cable	1
	14	3161970	Knob	1

UN_CE_0738-FU

Model 6950

Version:

Serial number:

Code: **24103**

26/04/2018

400 V - 50 Hz - 3 ~

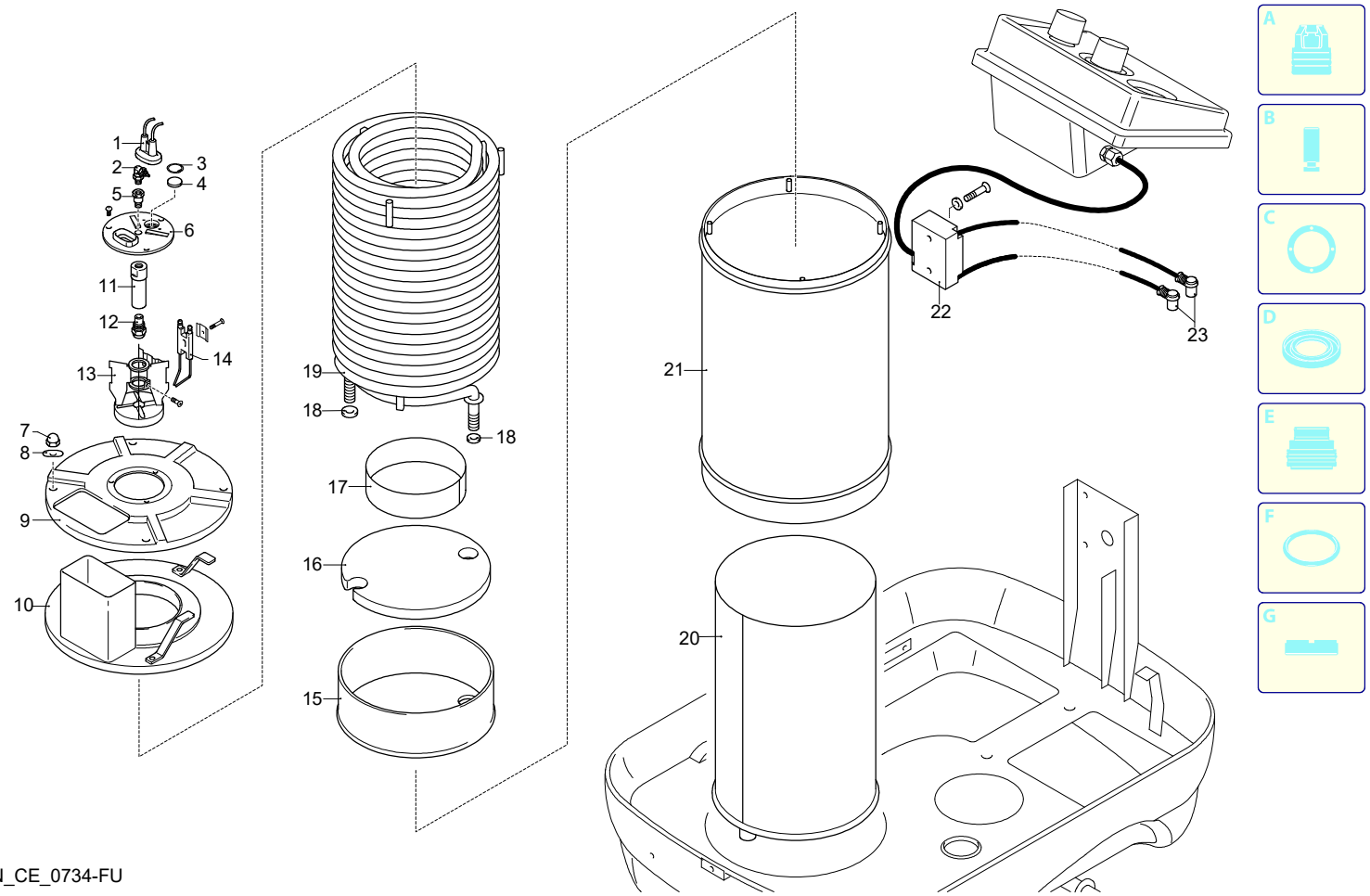

UN_CE_0734-FU

Validity	Pos.	Code	Description	Q
	1	3162370	Guard	1
	2	3161100	Fitting	1
	3	3162030	Ring	1
	4	3161860	Glass	1
	5	3161230	Fitting	1
	6	3161840	Plate	1
	7	3163960	Nut	4
	8	3163940	Washer	4
	9	3161790	Cover	1
	10	3161780	Cover	1
	11	3161870	Nozzle holder	1
	12	3162830	Nozzle	1
	13	3161560	Support	1
	14	3161890	Electrode	1
	15	3161770	Cover	1
	16	3161830	Plate	1
	17	3161430	Ring	1
	18	3162040	Washer	2
	19	3161760	Pipe coil	1
	20	3161480	Boiler	1
	21	3161470	Boiler	1
	22	50717	Danfoss/Fida transformer	1
	23	3160820	Cable	2

Model 6950

Version:

Serial number:

Code: **24103**

26/04/2018

400 V - 50 Hz - 3 ~

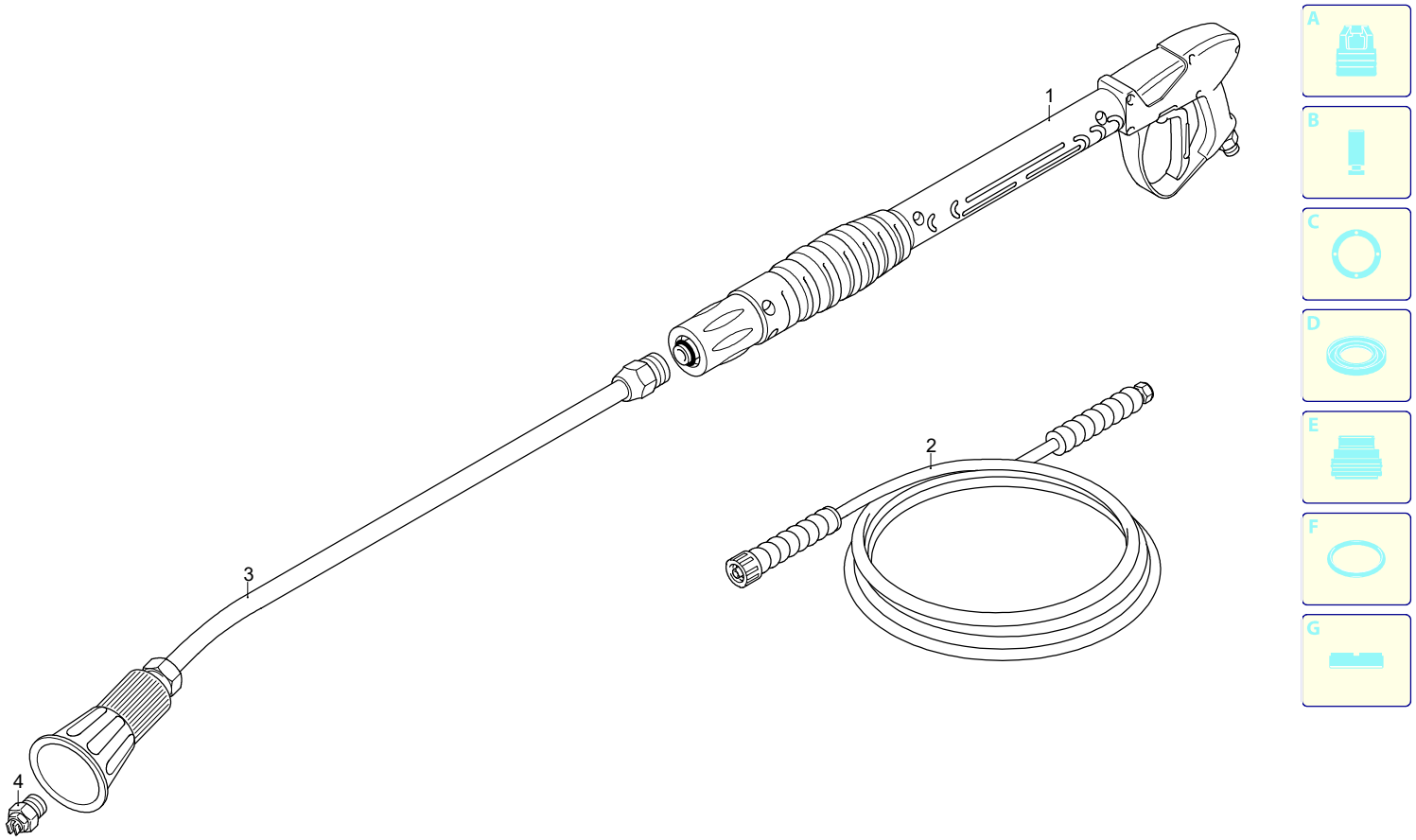

Validity	Pos.	Code	Description	Q
	1	41089	Gun	1
	2	3160160	High pressure hose	1
	3	40826	Lance	1
	4	3083	Nozzle	1

UN_CE_0739-FU