Model 671 TSS

Version:

Serial number:

Code: **14697**

26/11/2019

240 V - 50 Hz | **schuko**

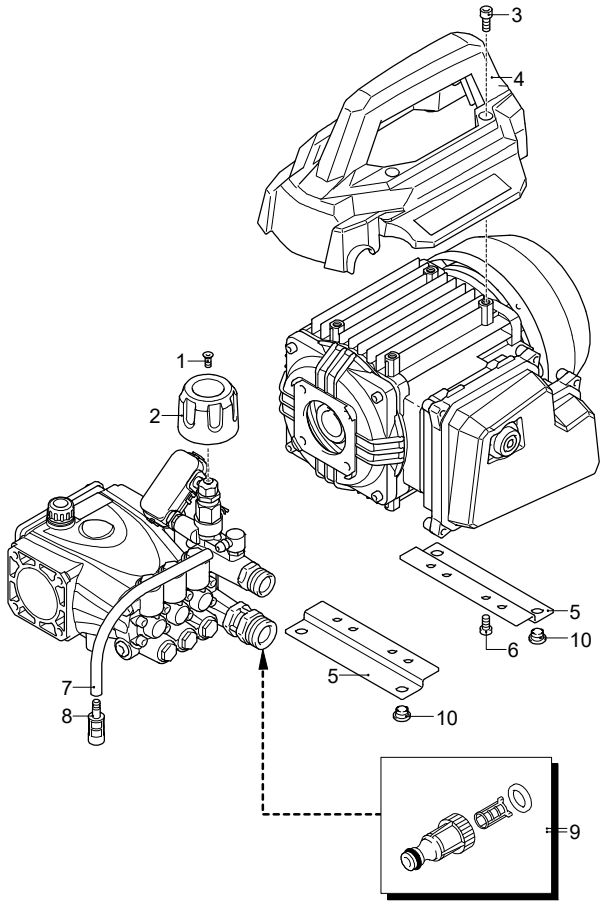

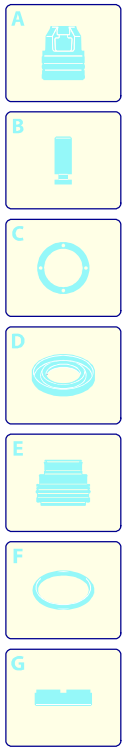

Validity	Pos.	Code	Description	Q
	1	3800250	Screw	1
	2	3961260	Knob	1
	3	1200430	Screw	4
	4	4760090	Casing	1
	5	4760100	Foot	2
	6	1321780	Screw	4
	7	1262790	Detergent hose	1
	8	2000230	Filter	1
	9	3082130	Water coupling kit	1
	10	740420	Vibration damper	4

UN_CE_2519-AL

Model 671 TSS

Version:

Serial number:

Code: **14697**

26/11/2019

240 V - 50 Hz | **schuko**

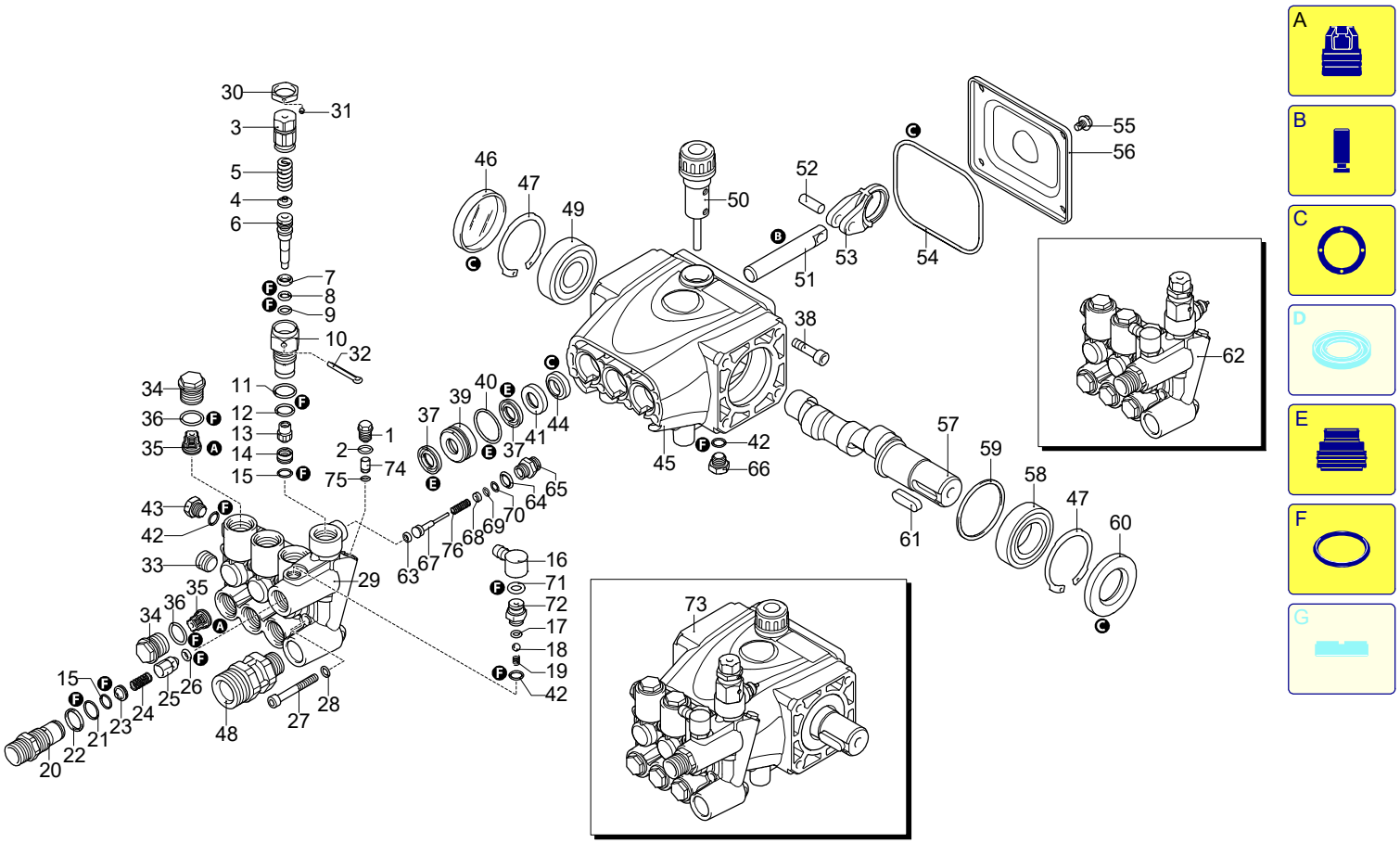

UN_CE_2520-GL

Validity	Pos.	Code	Description	Q
	1	3720730	Plug	1
	2	1682800	O-ring	1
	3	3800960	Screw	1
	4	1980220	Plate	1
	5	4140620	Spring	1
	6	4140170	Piston	1
	7	2260100	O-ring	1
	8	660190	O-ring	1
	9	2760210	Ring	1
	10	3800970	Piston guide	1
	11	740290	O-ring	1
	12	820510	O-ring	1
	13	3800230	Piston	1
	14	2841080	Seat	1
	15	1470210	O-ring	2
	16	2320180	Hose tail	1
	17	480480	O-ring	1
	18	1250280	Ball	1
	19	1560520	Spring	1
	20	2761150	Fitting	1
	21	2760270	O-ring	1
	22	394280	O-ring	1
	23	2760120	Injector	1
	24	2760200	Spring	1
	25	2761511	Shutter	1
	26	2101770	O-ring	1
	27	1345180	Screw	8
	28	4140140	Washer	8
	29	4140650	Head	1
	30	3800200	Nut	1
	31	3800240	Screw	1
	32	2500550	Split pin	1
	33	2760260	Plug	2
	34	2840130	Plug	6
	35	2849051	Complete valve	6
	36	2841520	O-ring	6
	37	2200141	Water seal	6
	38	880280	Screw	4
	39	2840550	Bushing	3
	40	770590	O-ring	3
	41	2841390	Bushing	3
	42	3700250	O-ring	3
	43	2841800	Plug	1
	44	1683500	Oil seal	3
	45	4140010	Pump body	1
	46	4140150	Cover	1
	47	4140360	Ring	2
	48	4140570	Fitting	1
	49	4140110	Bearing	1
	50	4140210	Plug	1
	51	4140060	Piston	3
	52	4140070	Pin	3
	53	4140080	Connecting-rod	3
	54	4140090	O-ring	1
	55	4140270	Screw	4
	56	4140030	Cover	1
	57	4140310	Shaft	1
	58	4140100	Bearing	1
	59	4140190	Ring	1
	60	4140200	Oil seal	1
	61	1380520	Key	1
	62	46293	Head assembly	1

Model 671 TSS

Version:

Serial number:

Code: **14697**

26/11/2019

240 V - 50 Hz | **schuko**

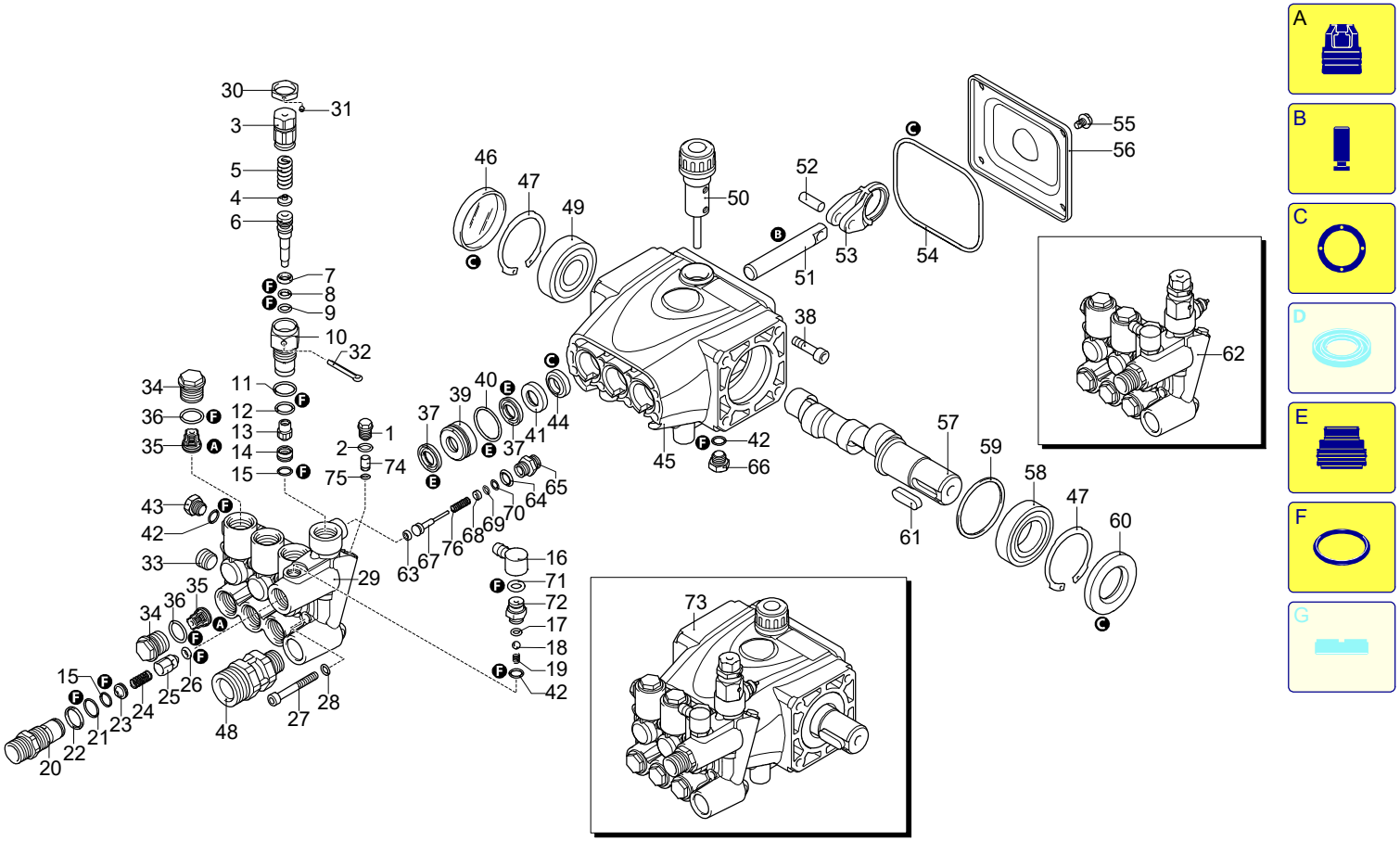

Validity	Pos.	Code	Description	Q
	63	1120681	O-ring	1
	64	600180	O-ring	1
	65	4140640	Plug	1
	66	2841800	Plug	1
	67	4140420	Pin	1
	68	2021650	Washer	1
	69	1260820	O-ring	1
	70	3740050	Ring	1
	71	480560	O-ring	1
	72	1344620	Fitting	1
	73	46585	Pump assembly	1
	74	3721210	Seat	1
	75	3720750	O-ring	1
	76	2260460	Spring	1
	A	43478	Valve kit	1
	B	43479	Piston kit	1
	C	43480	Oil seal kit	1
	E	43481	Water seal kit	1
	F	43482	Gasket kit	1

UN_CE_2520-GL

Model 671 TSS

Version:

Serial number:

Code: **14697**

26/11/2019

240 V - 50 Hz | **schuko**

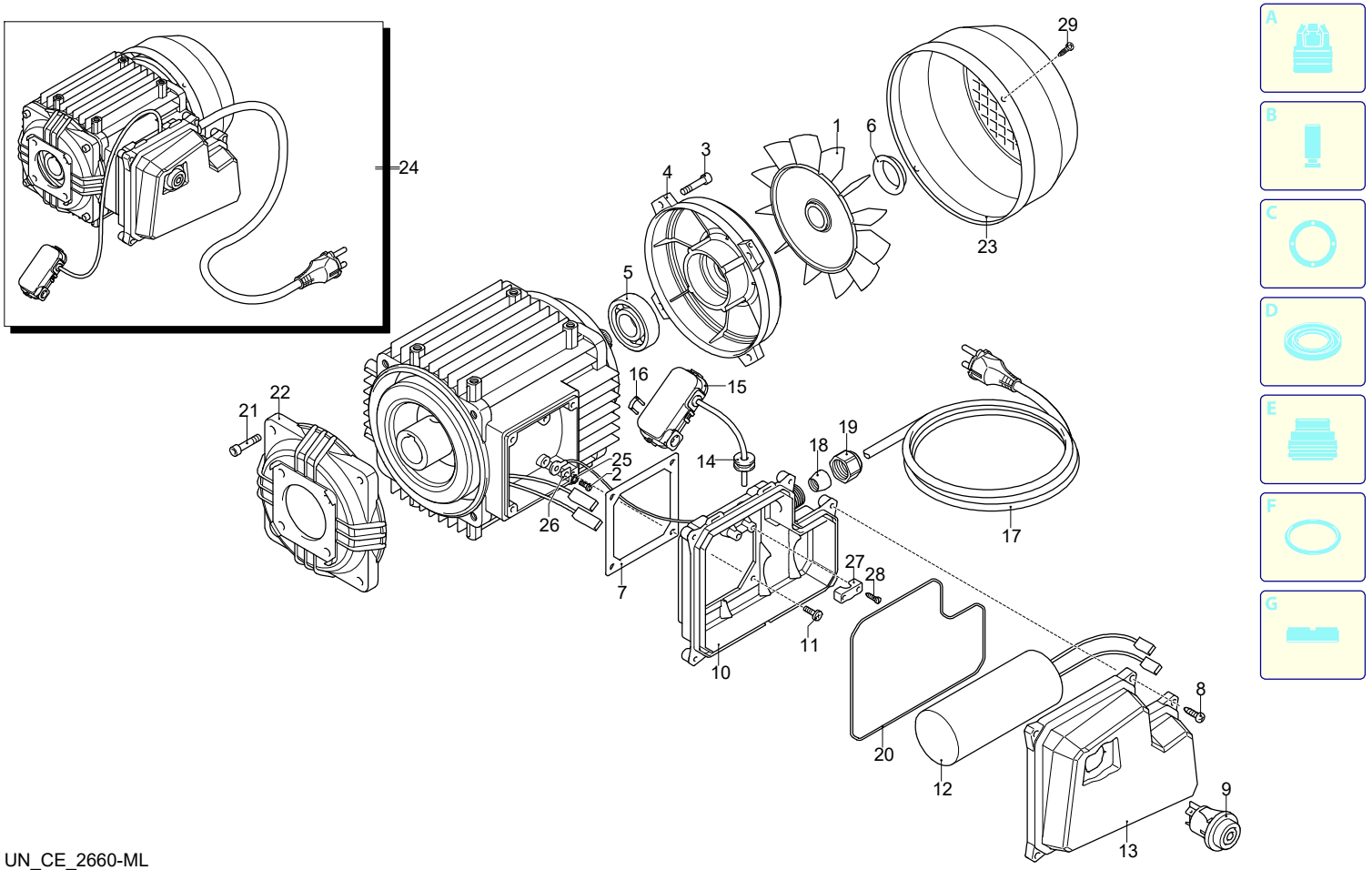

Validity	Pos.	Code	Description	Q
	1	4760210	Fan	1
	2	4760550	Screw	1
	3	1260780	Screw	4
	4	4760080	Shield	1
	5	4760240	Bearing	1
	6	4760250	Ring nut	1
	7	4760260	Gasket	1
	8	4760560	Screw	5
	9	4760220	Switch	1
	10	4760440	Base	1
	11	4760540	Screw	4
	12	4760020	Capacitor	1
	13	4760450	Cover	1
	14	1462900	Gland	2
	15	46295	TSS box assembly	1
	16	2021960	Fork	1
	17	1760450	Cable	1
	18	4760530	Gland	1
	19	4760480	Ring nut	1
	20	4760470	O-ring	1
	21	1260780	Screw	4
	22	4760050	Flange	1
	23	4760110	Fan cowling	1
	24	46584	Motor	1
	25	1262400	Washer	1
	26	4760610	Washer	1
	27	4760170	Cable retainer	1
	28	4760500	Screw	2
	29	4760580	Screw	2

UN_CE_2660-ML

Model 671 TSS

Version:

Serial number:

Code: **14697**

26/11/2019

240 V - 50 Hz | **schuko**

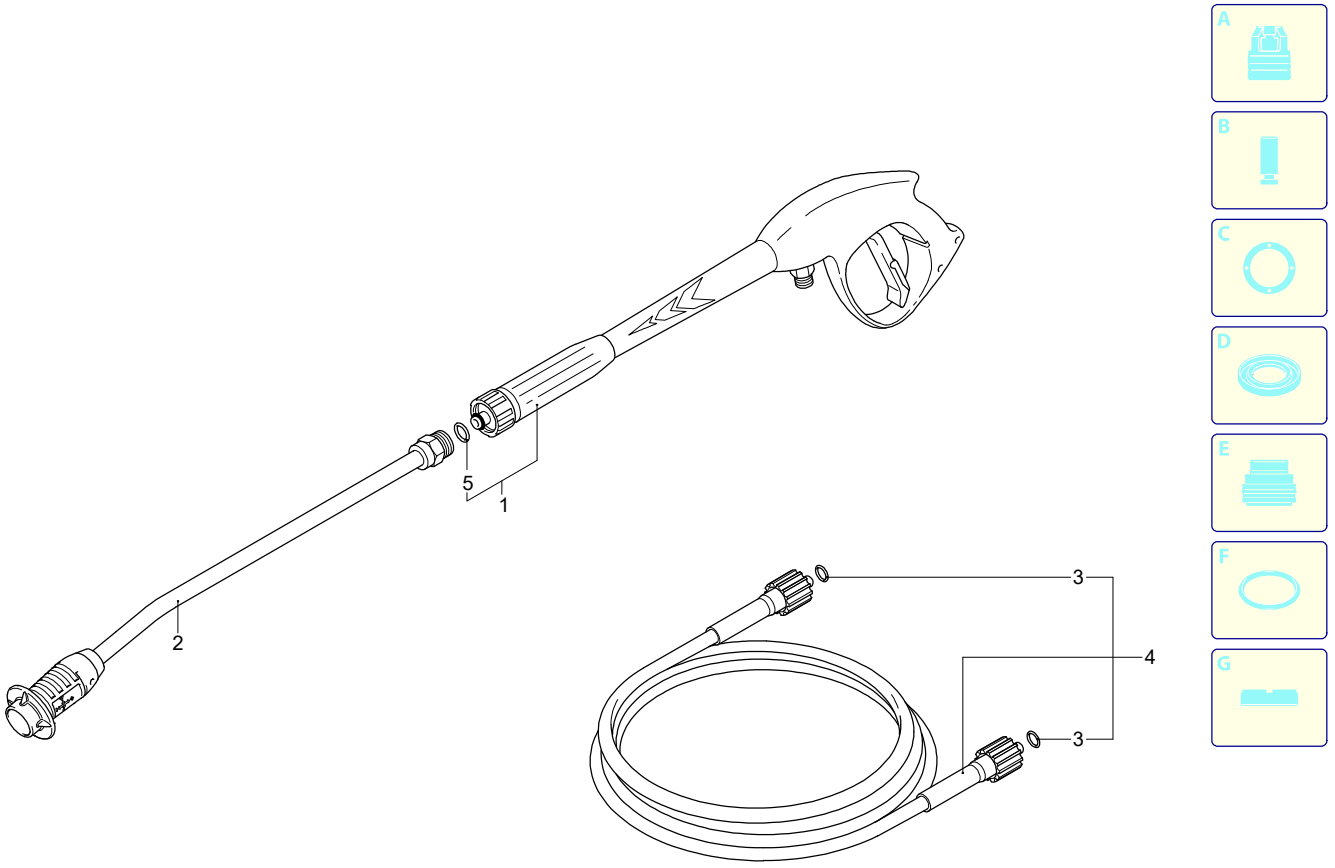

Validity	Pos.	Code	Description	Q
	1	40925	Gun	1
	2	43955	Lance	1
	3	2000770	O-ring	2
	4	3780491	High pressure hose	1
	5	391000	O-ring	1

UN_CE_2522-AL