Model 6670-N

Version:

Serial number:

Code: **25288**

26/04/2018

400 V - 50 Hz - 3 ~

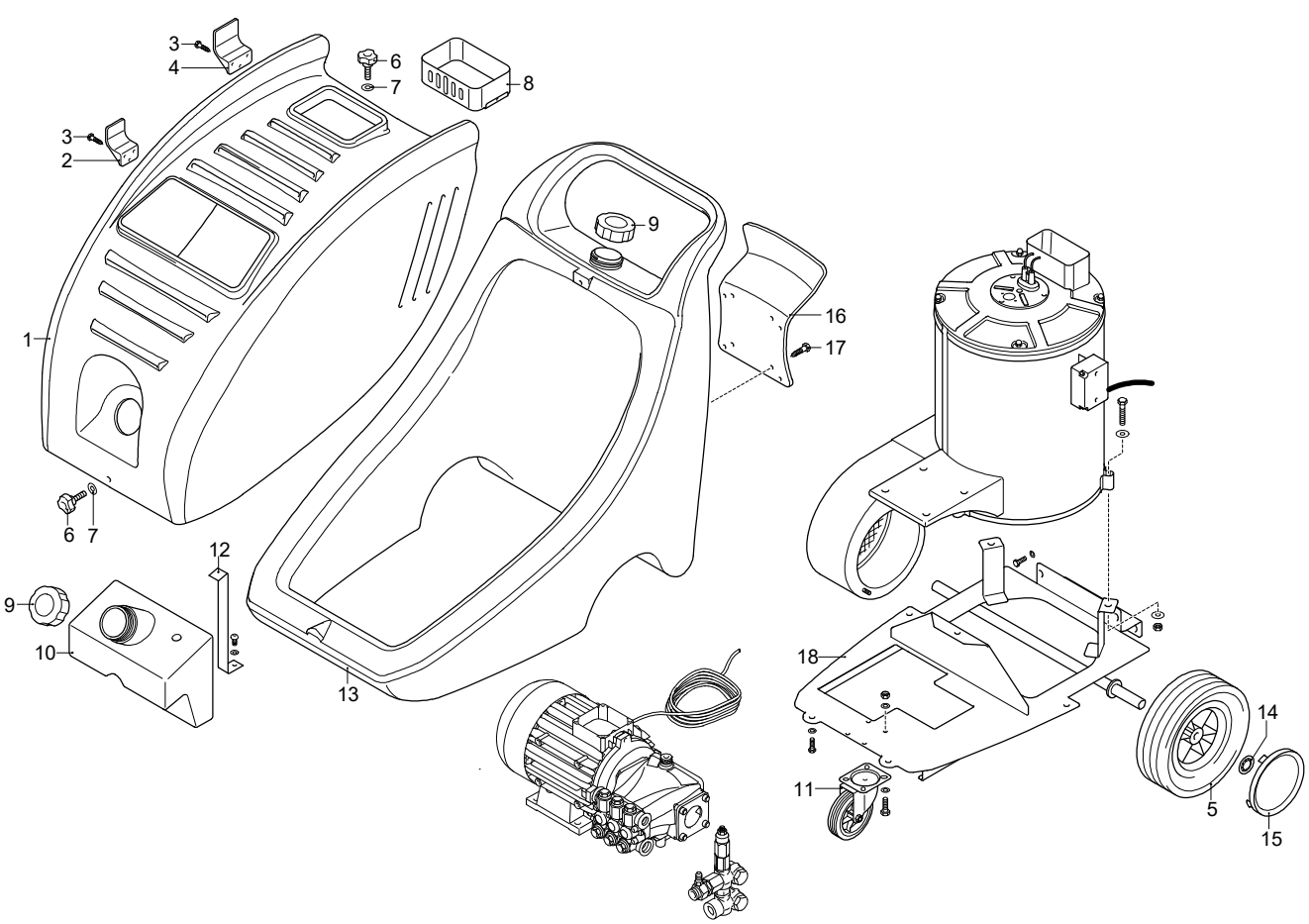

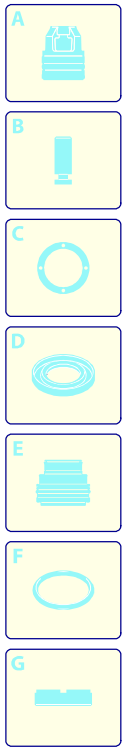

Validity	Pos.	Code	Description	Q
	1	3160730	Blue casing	1
	2	3160100	Accessories carrier	1
	3	2100300	Screw	6
	4	3160110	Accessories carrier	1
	5	3164380	Wheel	2
	6	3163890	Knob	2
	7	3163290	Washer	2
	8	3163880	Guard	1
	9	3161920	Plug	2
	10	3163900	Tank	1
	11	3160760	Wheel	1
	12	3163910	Bracket	1
	13	3161550	Tank	1
	14	3162010	Ring	2
	15	3161940	Guard	2
	16	3160090	Accessories carrier	1
	17	2360360	Screw	4
	18	3160710	Frame	1

UN_CE_1774-KQ

Model 6670-N

Version:

Serial number:

Code: **25288**

26/04/2018

400 V - 50 Hz - 3 ~

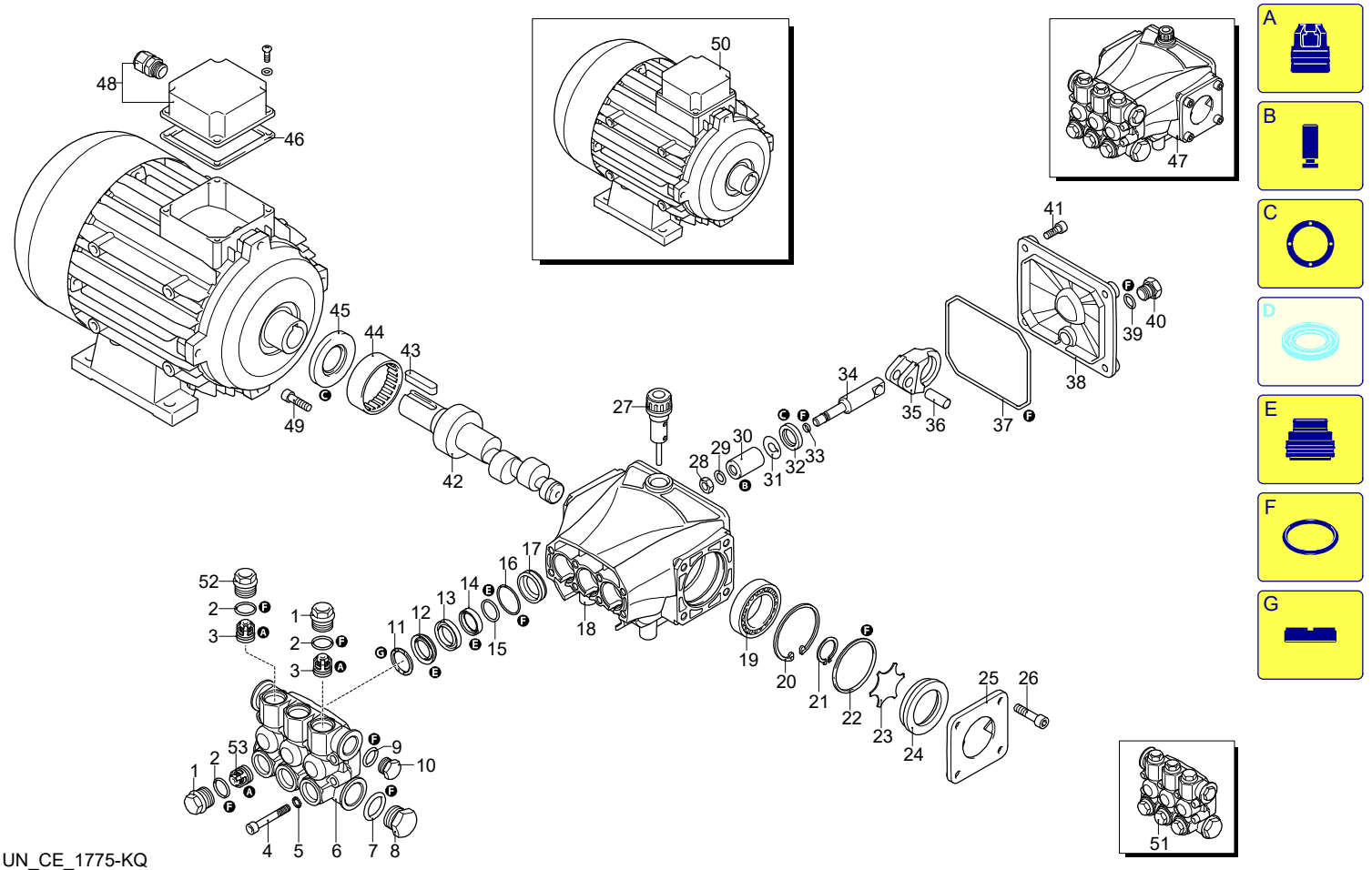

UN_CE_1775-KQ

Validity	Pos.	Code	Description	Q
	1	3200110	Plug	4
	2	1200690	O-ring	6
	3	2769050	Complete valve	3
	4	800410	Screw	8
	5	1381550	Washer	8
	6	3200020	Head	1
	7	180101	O-ring	1
	8	820361	Plug	1
	9	740290	O-ring	1
	10	1980740	Plug	1
	11	1780140	Ring	3
	12	1780720	Water seal	3
	13	3200130	Piston guide	3
	14	3200142	Gasket	3
	15	3200260	Ring	3
	16	770590	O-ring	3
	17	3200120	Piston guide	3
	18	3200010	Pump body	1
	19	1780490	Bearing	1
	20	1260790	Ring	1
	21	1780550	Ring	1
	22	395081	O-ring	1
	23	3200090	Plate	1
	24	3200080	Level gauge	1
	25	3200070	Support	1
	26	1200430	Screw	4
	27	880130	Plug	1
	28	1260110	Nut	3
	29	1260100	Washer	3
	30	1260210	Piston	3
	31	1260091	Plate	3
	32	1260460	Oil seal	3
	33	480480	O-ring	3
	34	3200060	Piston	3
	35	3200040	Connecting-rod	3
	36	1780050	Pin	3
	37	2760280	O-ring	1
	38	3200030	Cover	1
	39	820510	O-ring	1
	40	880581	Plug	1
	41	3200220	Screw	4
	42	3200270	Shaft	1
	43	3200230	Key	1
	44	1321190	Bearing	1
	45	1260750	Ring	1
	46	50068	Gasket	1
	47	23302	Pump assembly	1
	48	50069	Box	1
	49	1200430	Screw	4
	50	44273	Motor	1
	51	3209215	Head assembly	1
	52	3200430	Plug	2
	53	3209051	Complete valve	3
	A	2186	Valve kit	1
	B	42467	Piston kit	1
	C	42468	Oil seal kit	1
	E	42469	Water seal kit	1
	F	42470	Gasket kit	1
	G	2745	Support ring kit	1

Model 6670-N

Version:

Serial number:

Code: **25288**

26/04/2018

400 V - 50 Hz - 3 ~

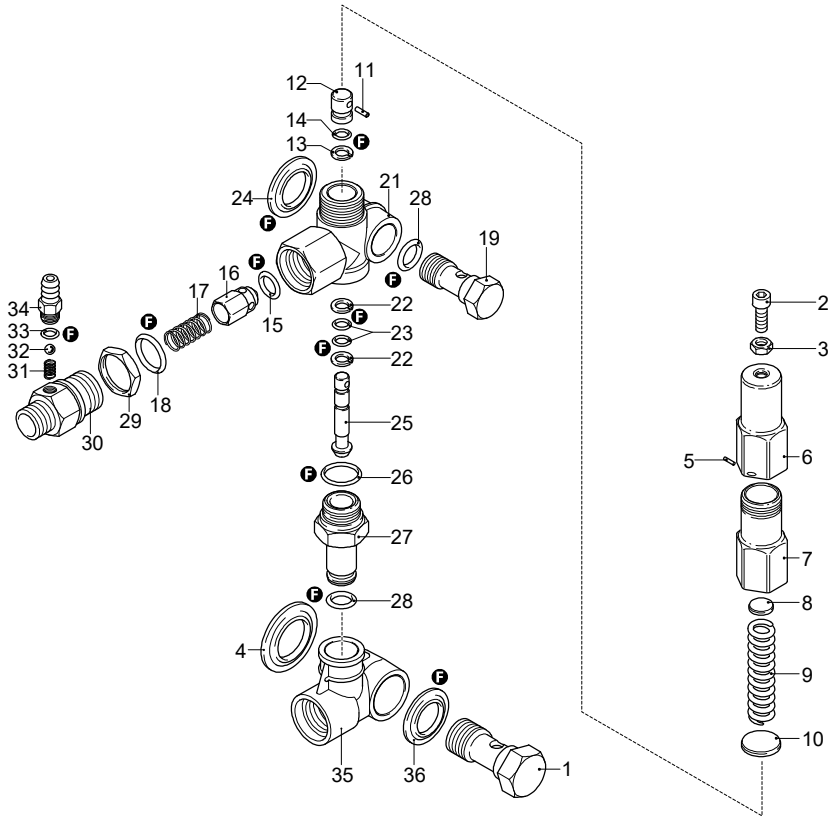

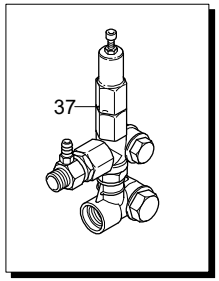

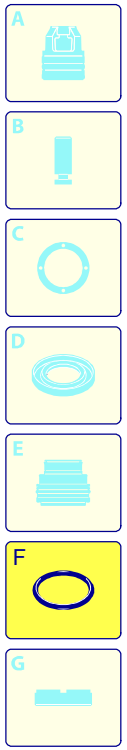

Validity	Pos.	Code	Description	Q
	1	1540090	Fitting	1
	2	540290	Screw	1
	3	1660210	Nut	1
	4	1560290	Washer	1
	5	2500550	Split pin	1
	6	1560420	Screw	1
	7	1560410	Guide	1
	8	1560440	Wobble plate	1
	9	1560350	Spring	1
	10	1080610	Wobble plate	1
	11	1080660	Pin	1
	12	1080540	Piston	1
	13	391000	O-ring	1
	14	1080640	Ring	1
	15	1560150	O-ring	1
	16	1560100	Shutter	1
	17	1560140	Spring	1
	18	180101	O-ring	1
	19	1540272	Screw	1
	21	1560010	Valve body	1
	22	1080550	Ring	2
	23	480480	O-ring	2
	24	1560280	Washer	1
	25	1560320	Piston	1
	26	880270	O-ring	1
	27	1560051	Fitting	1
	28	390080	O-ring	2
	29	1560510	Nut	1
	30	1560530	Fitting	1
	31	1560520	Spring	1
	32	1250280	Ball	1
	33	480480	O-ring	1
	34	1560490	Hose tail	1
	35	1540020	Suction fitting	1
	36	1540120	Washer	1
	37	24408	Complete valve	1
	F	2611	Gasket kit	1

UN_CE_1776-KQ

Model 6670-N

Version:

Serial number:

Code: **25288**

26/04/2018

400 V - 50 Hz - 3 ~

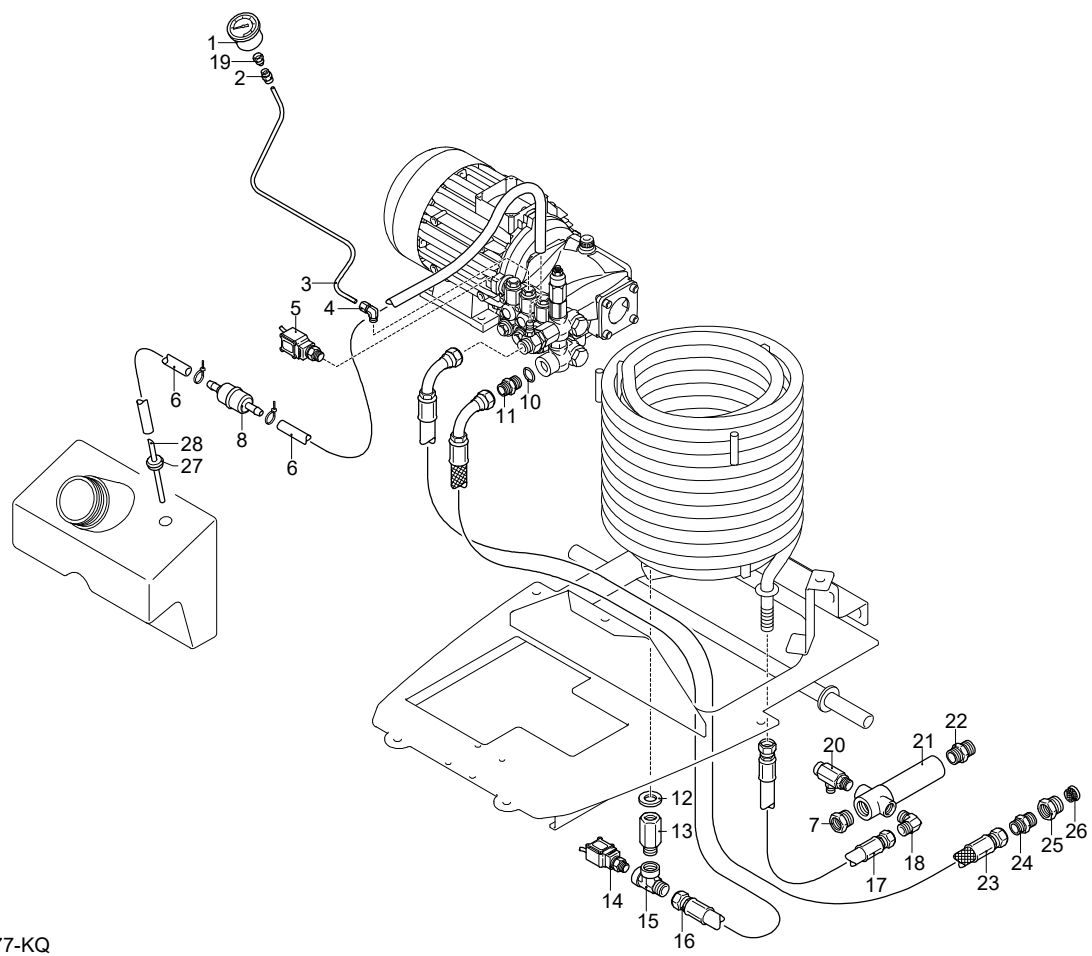

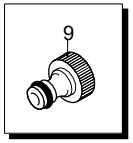

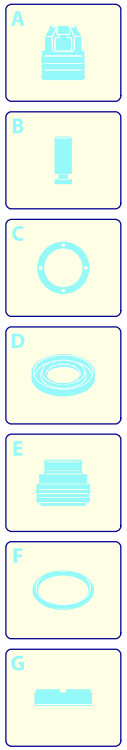

Validity	Pos.	Code	Description	Q
	1	3161040	Pressure gauge	1
	2	3164070	Fitting	1
	3	3163510	Pipe	1
	4	3161110	Fitting	1
	5	3162890	Pressure switch	1
	6	3163850	Detergent hose	1
	7	3161210	Fitting	1
	8	3163560	Filter	1
	9	1461470	Fitting	1
	10	740290	O-ring	1
	11	3160210	Fitting	1
	12	3162040	Washer	1
	13	3160430	Fitting	1
	14	3161080	Pressure switch	1
	15	3160510	Fitting	1
	16	3164400	Pipe	1
	17	3161310	Pipe	1
	18	3161190	Fitting	1
	19	3161260	Fitting	1
	20	3161400	Safety valve	1
	21	3161170	Fitting	1
	22	3161150	Fitting	1
	23	3161290	Pipe	1
	24	3161180	Fitting	1
	25	3160480	Fitting	1
	26	50713	Filter	1
	27	3161050	Gland	1
	28	3163840	Pipe	1

UN_CE_1777-KQ

Model 6670-N

Version:

Serial number:

Code: **25288**

26/04/2018

400 V - 50 Hz - 3 ~

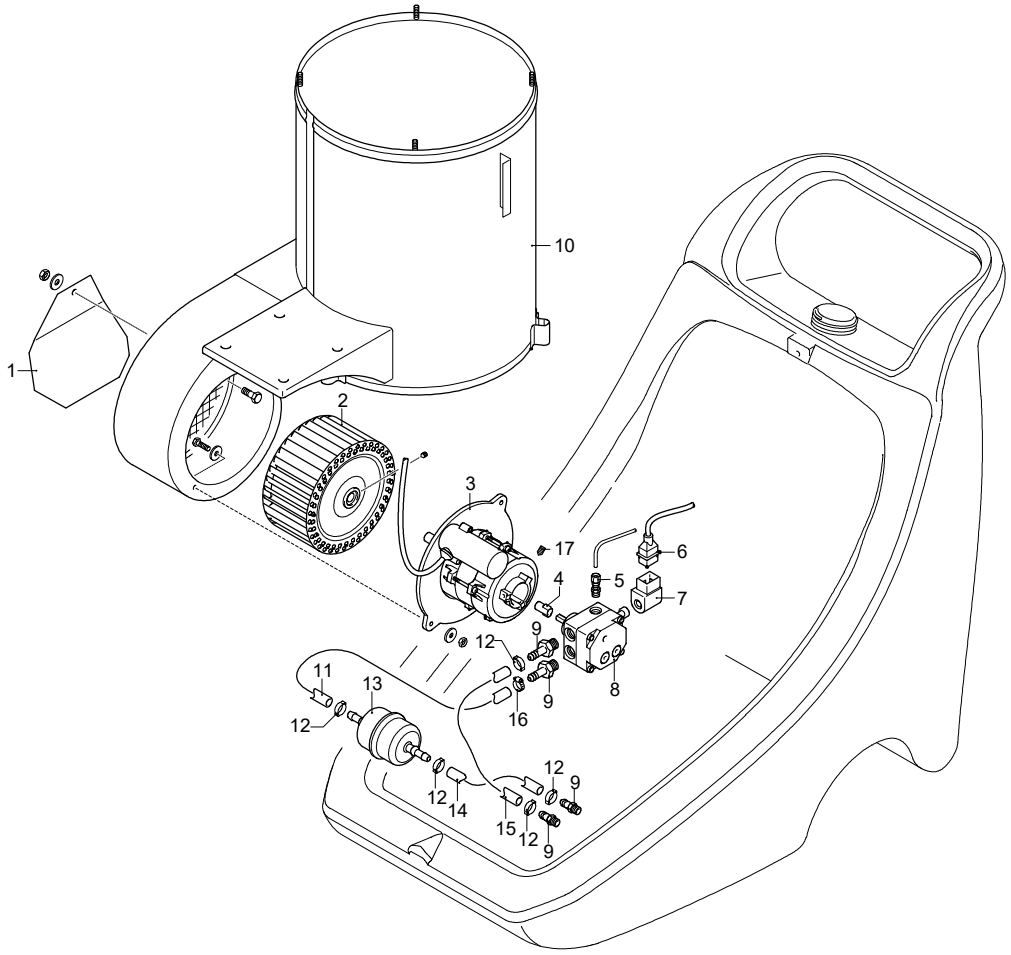

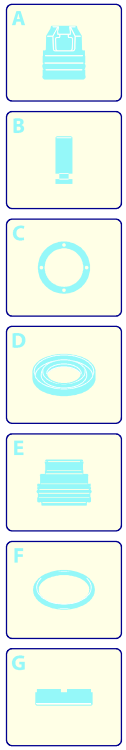

Validity	Pos.	Code	Description	Q
	1	3161900	Plate	1
	2	3161810	Fan	1
	3	3161530	Motor	1
	4	3160300	Coupling	1
	5	3160330	Fitting	1
	6	3161440	Cable	1
	7	3160320	Solenoid	1
	8	3162910	Pump	1
	9	3160340	Hose tail	4
	10	3161460	Boiler	1
	11	3161620	Pipe	5
	12	3162060	Clamp	5
	13	3161520	Filter	1
	14	3161610	Pipe	1
	15	3161580	Pipe	1
	16	3163920	Clamp	1
	17	3163540	Screw	1

UN_CE_0481-FW

Model 6670-N

Version:

Serial number:

Code: **25288**

26/04/2018

400 V - 50 Hz - 3 ~

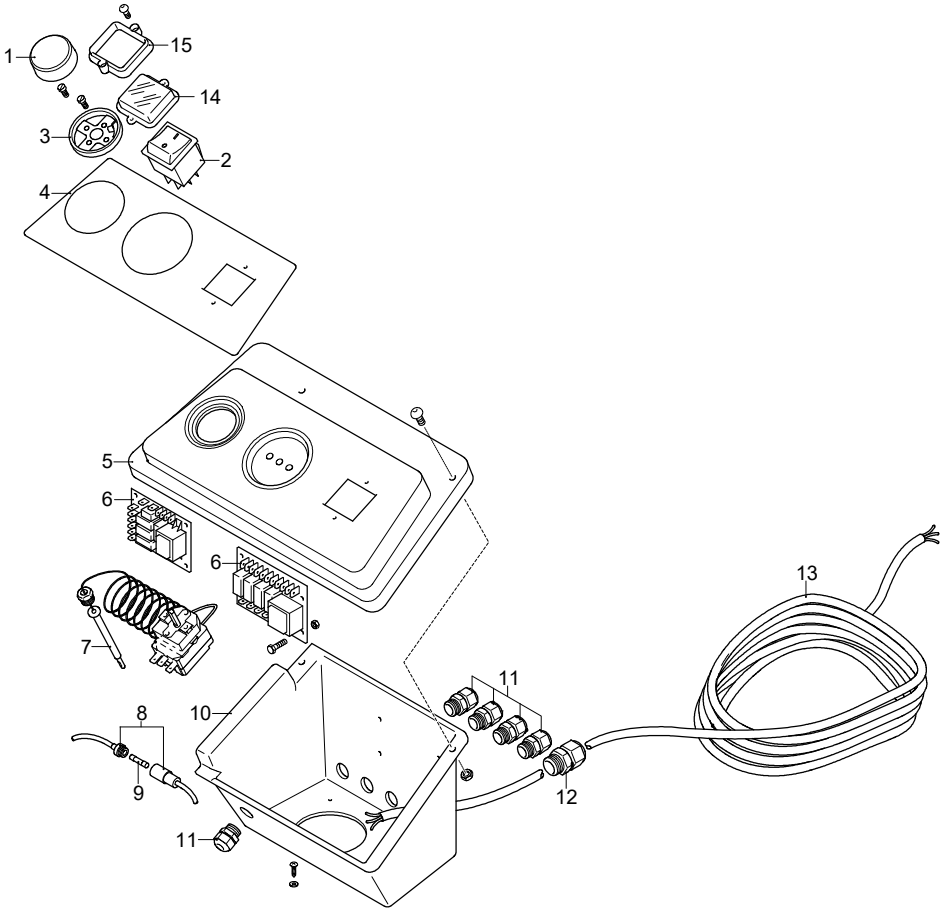

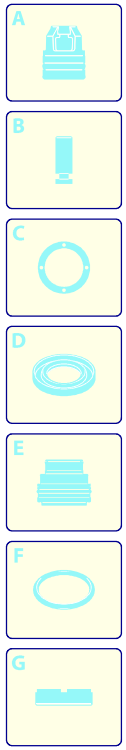

Validity	Pos.	Code	Description	Q
	1	3161960	Knob	1
	2	3162810	Switch	1
	3	3161990	Support	1
	4	3163120	Plate	1
	5	3160940	Support	1
	6	3160900	Board - ALB 012	1
	6	3163660	Board - TSP 16	1
	7	50720	Thermostat	1
	8	3163720	Fuse holder	1
	9	3160920	Fuse	1
	10	3160930	Box	1
	11	3160860	Gland	5
	12	3160870	Gland	1
	13	3160810	Cable	1
	14	3162860	Guard	1
	15	3162870	Guard	1

UN_CE_0490-FW

Model 6670-N

Version:

Serial number:

Code: **25288**

26/04/2018

400 V - 50 Hz - 3 ~

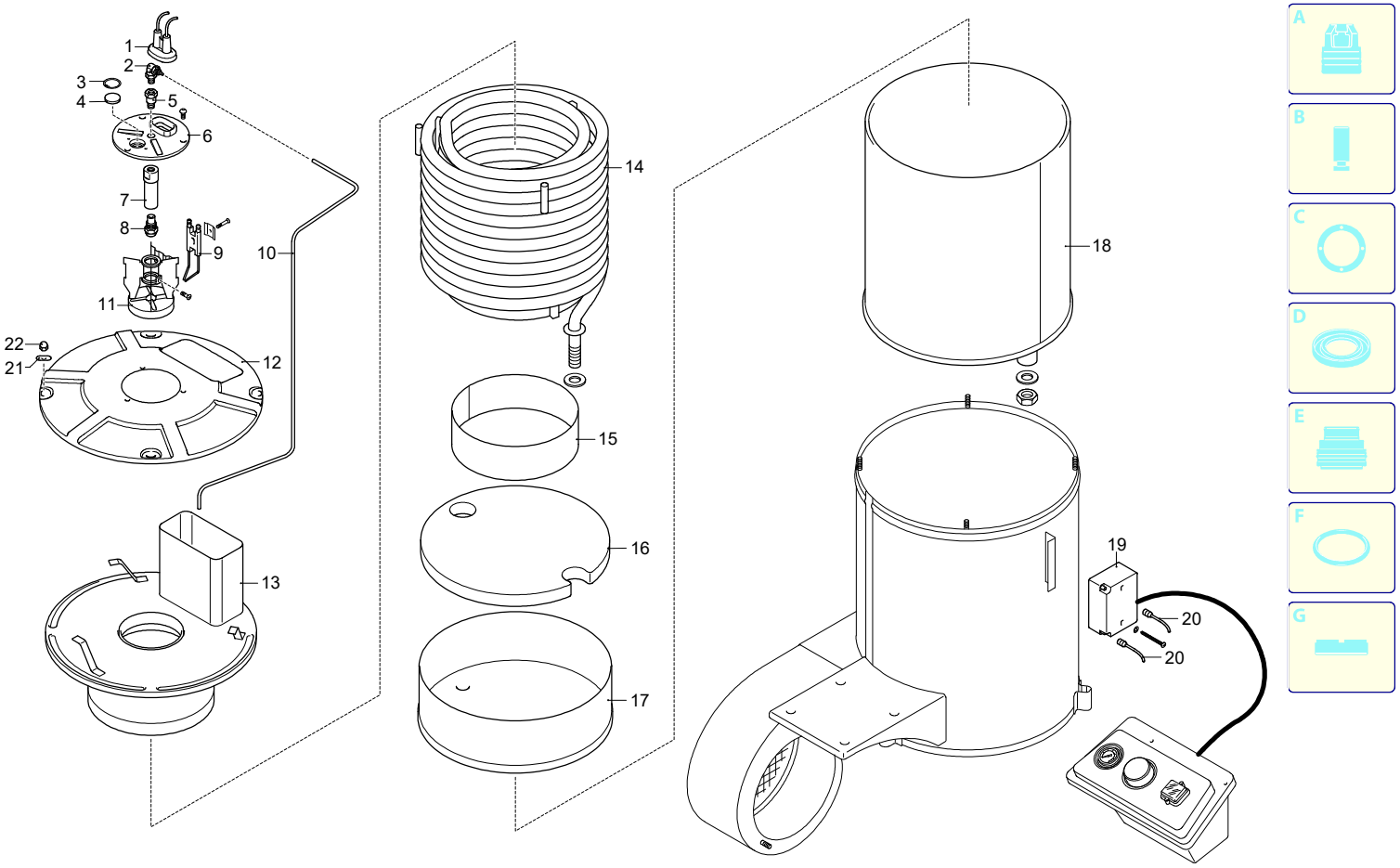

UN_CE_0491-DU

Validity	Pos.	Code	Description	Q
	1	3162370	Guard	1
	2	3161100	Fitting	1
	3	3162030	Ring	1
	4	3161860	Glass	1
	5	3161230	Fitting	1
	6	3161840	Plate	1
	7	3161870	Nozzle holder	1
	8	3162830	Nozzle	1
	9	3161890	Electrode	1
	10	3161680	Pipe	1
	11	3161560	Support	1
	12	3161790	Cover	1
	13	3161780	Cover	1
	14	3161750	Pipe coil	1
	15	3161430	Ring	1
	16	3161830	Plate	1
	17	3161770	Cover	1
	18	3161450	Boiler	1
	19	50717	Danfoss/Fida transformer	1
	20	3160830	Danfoss/Fida cable	2
	21	3163940	Washer	4
	22	3163960	Nut	4

Model 6670-N

Version:

Serial number:

Code: **25288**

26/04/2018

400 V - 50 Hz - 3 ~

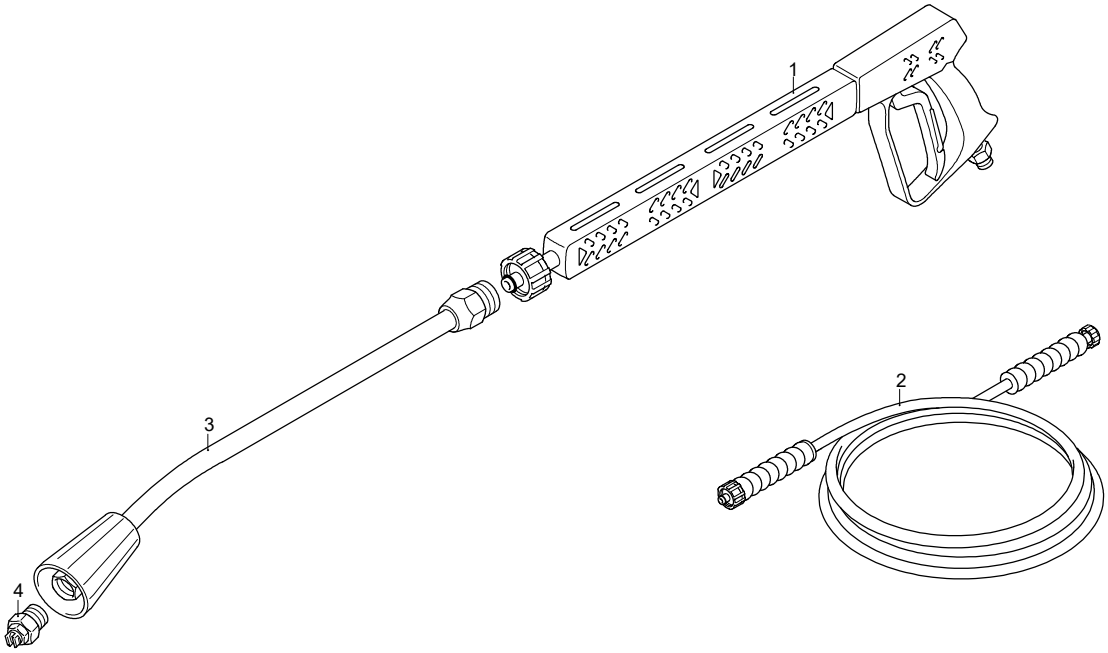

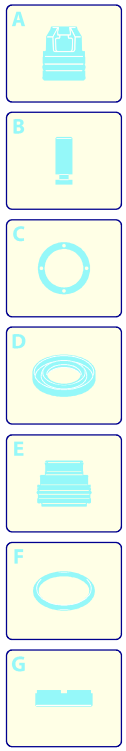

Validity	Pos.	Code	Description	Q
	1	40825	Gun	1
	2	3160160	High pressure hose	1
	3	40826	Lance	1
	4	3086	Nozzle	1

UN_CE_0482-FW